SMITH® JAY R. SMITH MFG. CO.®
MEMBER OF MORRIS GROUP INTERNATIONAL
POST OFFICE BOX 3237
MONTGOMERY, ALABAMA 36109-0237 (USA)
TEL: 334-277-8520 FAX: 888-377-7818 www.jrsmith.com
CUSTOMER DRIVEN SINCE 1926
MEMBER OF:

LOCATION

MULTI-PURPOSE FLOOR CLEANOUTS WITH INTERNAL CLOSURE PLUG

ROUND NON-ADJUSTABLE CAST IRON TOP

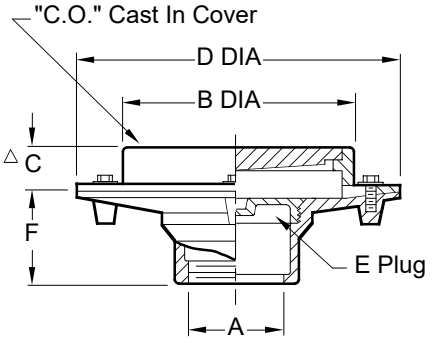

MEDIUM DUTY COVER

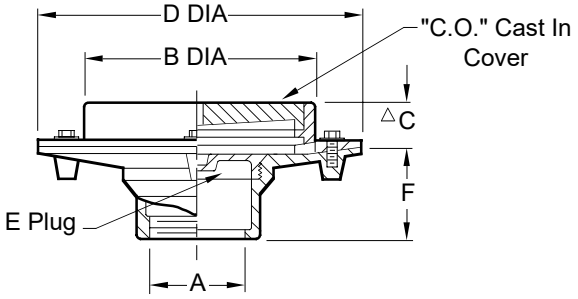

HEAVY DUTY COVER

☐ Fig. 4333C . . . . . TAPER THREAD - BRONZE PLUG . . . . . ☐ Fig. 4338C

Conforms to ASME A112.36.2/CSA B79.2

A SIZE	B DIA	ΔC	D DIA	E SIZE	F
02 (50)	8 1/2 (215)	1 5/8 (41)	12 (305)	3 1/2 (89)	4 (100)
03 (80)	8 1/2 (215)	1 5/8 (41)	12 (305)	4 (100)	4 (100)
04 (100)	8 1/2 (215)	1 5/8 (41)	12 (305)	5 (125)	4 (100)

Δ add 1/4"(6) when bronze top is specified

Collar can be used as flashing clamp when required

INSIDE CAULK OUTLET REGULAR

NOTE: Dimensions shown in parentheses are in millimeters.

REGULARLY FURNISHED:
Duco Cast Iron Body with Scoriated Loose Set Cast Iron Cover, Taper Thread Bronze Closure Plug and Flashing Collar.

VARIATIONS:
- ☐ NO-HUB Adaptor (Specify Fig. 2646Y)
- ☐ Recessed for Tile -RT
- ☐ Secured Cover -SC
- ☐ Secured Cover w/Vandal Proof Screws -U
- ☐ Square Top -S
- ☐ "T" Handle Plug -TH
  Plug tapped 1/4"(6) - 20 Thread
- ☐ 4"(100) Wide Flange (See Fig. DX4343)
- ☐ T Threaded Outlet

OPTIONAL MATERIALS:
- ☐ Galvanized Cast Iron -G
- ☐ Nickel Bronze Top -NB
- ☐ Polished Bronze Top -PB
- ☐ Stainless Steel (Specify Fig 9720)

REV.	DATE	DESCRIPTION	BY	CKD. BY
G	4-11-24	Added ASME Note	HS	CL
F	8-17-23	Removed Function	HS	CL
E	10-7-14	Revised Variations	TBW	BW
D	1-9-96	Added Millimeters	EMB	BS

WEIGHT POUNDS

VOLUME CUBIC FEET

FIGURE NUMBER **4333, 4338**

WARNING: Cancer and Reproductive Harm - www.P65Warnings.ca.gov

G | DRAWING NUMBER S4333 | SIZE A | SCALE: NONE | DATE: 2-16-70 | APPROVED BY: JM | CHECKED BY: BH | DRAWN BY: RK | FIGURE NUMBER 4333, 4338

DIMENSIONS ARE SUBJECT TO MANUFACTURERS TOLERANCE AND CHANGE WITHOUT NOTICE
WE CAN ASSUME NO RESPONSIBILITY FOR USE OF SUPERSEDED OR VOID DATA