REFERENCE DRAWINGS	
GRE24 MANUAL	7109-612-001
GYE24 MANUAL	7109-610-001

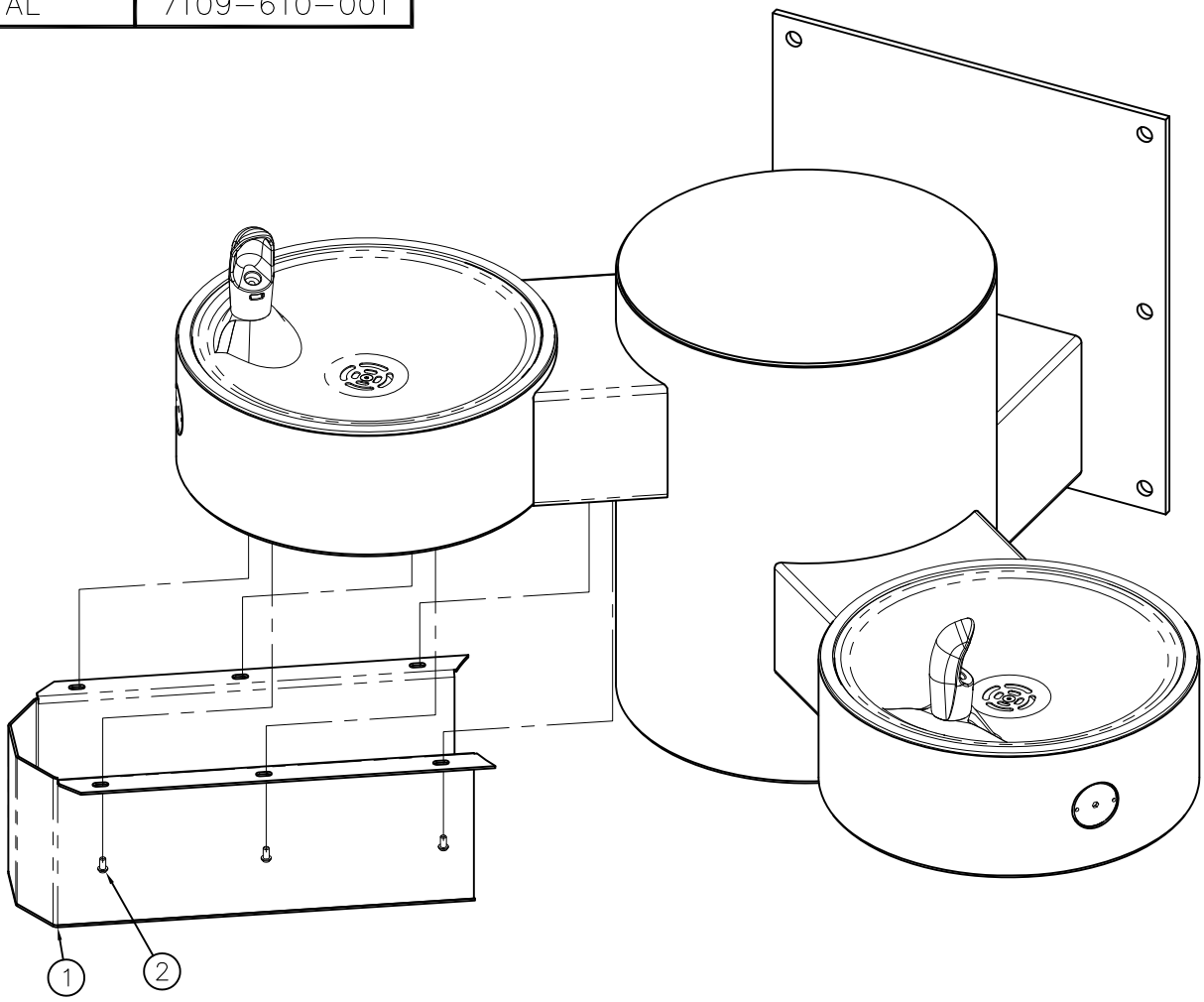

INSTALLATION INSTRUCTIONS:

A- REMOVE THE EXISTING BOTTOM ACCESS PANEL FROM THE BOTTOM OF THE HIGH SIDE DRINKING FOUNTAIN HOUSING. NOTE: SAVE THE SCREWS (2) FOR USE IN SECURING SK8 SKIRT (1).

B- CAREFULLY REMOVE THE -SK8 CANE SKIRT FROM THE PACKAGING PREVENTING SCRATCHING AND/OR DAMAGE.

C- ASSEMBLE SKIRT TO THE FOUNTAIN HOUSING THROUGH THE BOTTOM USING THE SCREWS (2) REMOVED IN STEP A.

murdock®
P.O. Box 3527 Industry, CA 91744
15125 Proctor Ave., City of Industry, CA 91746
(800) 453-7465 (626) 333-2543 www.murdockmfg.com

TITLE		
-SK8 GRE24 DF & GYE24 BF CANE SKIRT		
MANUFACTURE DATE	DATE ISSUED	DRAWING NUMBER
OCTOBER 2023 TO PRESENT	10/06/23	9938-125-001
	DATE REVISED	

5/32