murdock® SINCE 1853

DRINKING FOUNTAIN

A171-VR-WS Series

BASE MODEL A171400S-VR-WS

RETROFIT WALL-SAVING DESIGN, BARRIER FREE, WALL MOUNTED DRINKING FOUNTAIN WITH VANDAL RESISTANT BUTTON

Formerly Sold As # MA171-A008 Series (MA171400S-A008)



Model A171400S-VR-WS Shown
PATENT# US 10,100,933
PATENT# US 12,540,458 B2

Maintenance Advantage® Water Cooler by Murdock Manufacturing

STANDARD FEATURES

- ***Retrofit-Friendly Design Minimizes Wall Alterations***
- *EZ Door®* Filter, 30-Second Filter Replacement Option
- *Child or Adult ADA Compliant (When Properly Installed)*
- *Apron & One-Piece Bottom Wrapper is Satin Finish*
- *304 Stainless Steel Basin and Flush Mounted Chrome Plated Brass Button*
- *Polished Stn Stl, Anti-Rotation, Non-Squirt Bubbler*
- *100-Mesh Inlet Strainer*
- *Hanging Bracket provided*
- *Auto-Stop Allows Service of Cartridge and Strainer Without Shutting Off Water Supply Stop*
- *Meets Lead-Free Requirements*

SUGGESTED SPECIFICATIONS

Provide and install Murdock® A171400S-VR-WS retrofit compatible to replace existing units from other manufacturers. Drinking Fountain shall be activated by a Vandal Resistant, Chrome Plated Brass Pushbutton using less than 5 pounds of force. Bubbler shall be Lead-Free Stainless Steel with an integrally designed non-squirt feature and operate on a pressure range of 20-105 PSIG. Basin shall be constructed from 304 Stainless Steel and have an Integral Drain. Cabinet shall be Stainless Steel. Unit shall be certified to Public Law 111-380 (NO-LEAD) and NSF/ANSI/CAN 61. Fixture meets ADA, ADA Standing Person, and ADA Child requirements when mounted appropriately. Optional Easy Door® Water Filter Assembly shall provide a Filter with Latched Drop-down Access Door for easy access when replacing the Filter cartridge.

Complies with the following standards:

NSF/ANSI/CAN 61

Federal Public Law 111-380 (No Lead)

"RATED FOR INDOOR AND OUTDOOR USE"
Refer to Installation Instructions for complete details

MODEL:

STAINLESS STEEL BUBBLER *(Provided standard)*

☑ A171400S-VR-WS Retrofit Wall Saving Design, Stn Stl Finish

OPTIONS:

(Additional costs may apply.)

❑ -LOGO Customer Specified Logo / Graphics

ACCESSORIES:

(Additional costs may apply. Accessory items are packaged separately.)

❑ -WF3EZ 3000-Gallon Easy Door® PFAS Filter[1]
❑ -WF5EZ 5000-Gallon Easy Door® PFAS Filter[1]
❑ -WF12EZ 12000-Gallon Easy Door® Filter[1]

NOTES:

[1]- Refer to Supplemental Submittal Sheet for details.

NOTE: Units installed with exposure to extreme hot or cold temperatures require adequate protection. Units are not freeze resistant. Refer to Installation Instructions for complete details.

NSF/ANSI/CAN 61: Q ≤ 1
NSF/ANSI/CAN 61 Compliant including lower lead leaching criteria.

PFAS Filter Certifications | Product Warranty

⚠ WARNING: Cancer and Reproductive Harm - www.P65Warnings.ca.gov

MURDOCK MFG. • 15125 Proctor Avenue • City of Industry, CA 91746 USA
Phone 800-453-7465 or 626-333-2543 • www.murdockmfg.com

Member of MORRIS GROUP INTERNATIONAL

murdock®
SINCE 1853

DRINKING FOUNTAIN

A171-VR-WS Series

BASE MODEL A171400S-VR-WS

RETROFIT WALL-SAVING DESIGN, BARRIER FREE, WALL MOUNTED DRINKING FOUNTAIN WITH VANDAL RESISTANT BUTTON

A. HANGER BRACKET PUNCHING FOR ANCHORING HARDWARE BY OTHERS
B. Ø1/4" PUNCHING, 2 PLACES FOR ANCHORING HARDWARE BY OTHERS
C. PUSHBUTTON CARTRIDGE
D. 1-1/4" [32] O.D. TAILPIECE (PROVIDED)
E. 1-1/4" [32] O.D. P-TRAP (PROVIDED)
F. REMOVABLE PLUG FOR BOTTLE FILLER
G. OPTIONAL EZ DOOR® FILTER

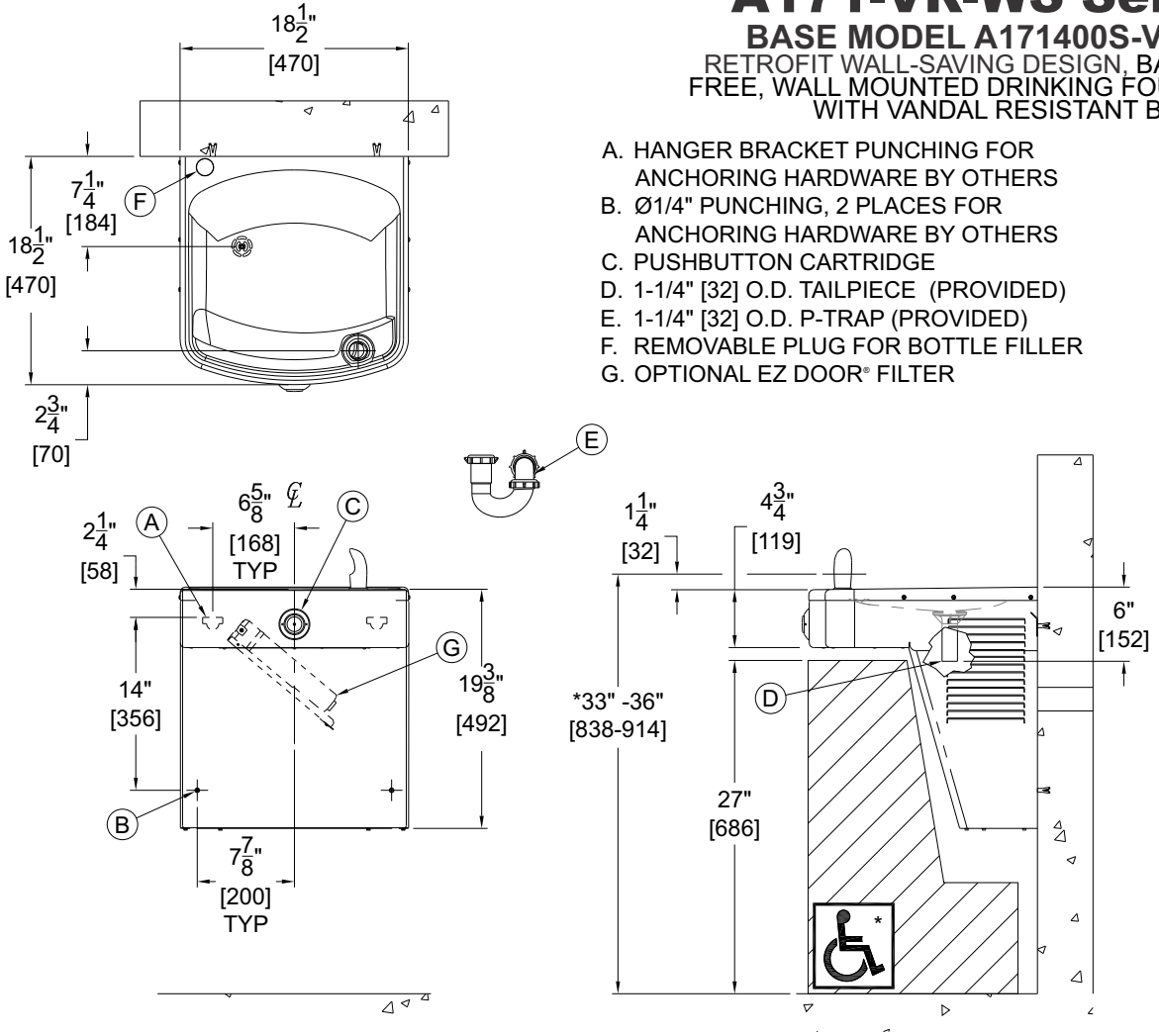

GENERAL NOTES:

1. ALL DIMENSIONS ARE IN INCHES [MM].
*2. DIMENSIONS SHOWN ARE FOR ADA ADULT HEIGHT. ADJUST VERTICAL DIMENSIONS AS NECESSARY TO COMPLY WITH FEDERAL, STATE, & LOCAL CODES. **IMPORTANT: RETROFITTING THE FIXTURE TO EXISTING WASTE HEIGHT MAY RAISE OR LOWER BUBBLER AND HOUSING WHICH MAY ADVERSELY AFFECT ADA COMPLIANCE.**
3. STOP VALVE NOT PROVIDED.
4. IMPORTANT: DRINKING FOUNTAIN MUST BE ATTACHED TO WALL WITH APPROPRIATE ANCHORING HARDWARE TO SUIT WALL CONSTRUCTION. HARDWARE NOT INCLUDED.

IMPORTANT: Intended as a Retrofit fixture. Refer to product Installation Manual for complete details pertaining to Rough-in.

SELECTION SUMMARY & APPROVAL FOR MANUFACTURING

Model Number & Options_____ Quantity_____

Company_____

Contact_____ Title_____

Signature (Approval for Manufacturing)_____ Date _____

All dimensions are subject to manufactures tolerance of plus or minus 1/4" nominal and subject to change without notice. Murdock® assumes no responsibility for use of void or superseded data. Dimensions may change with the addition of optional accessories. Murdock® Mfg., Member of Morris Group International®. Please visit ***www.murdockmfg.com*** *for most current specifications.*

MURDOCK MFG. • 15125 Proctor Avenue • City of Industry, CA 91746 USA
Phone 800-453-7465 or 626-333-2543 • www.murdockmfg.com

Member of MORRIS GROUP INTERNATIONAL