SMITH® JAY R. SMITH MFG. CO.®
MEMBER OF MORRIS GROUP INTERNATIONAL
POST OFFICE BOX 3237
MONTGOMERY, ALABAMA 36109-0237 (USA)
TEL: 334-277-8520 FAX: 888-377-7818 www.jrsmith.com
CUSTOMER DRIVEN SINCE 1926
MEMBER OF:

LOCATION

ROOF DRAINS

IRMA ROOF APPLICATIONS

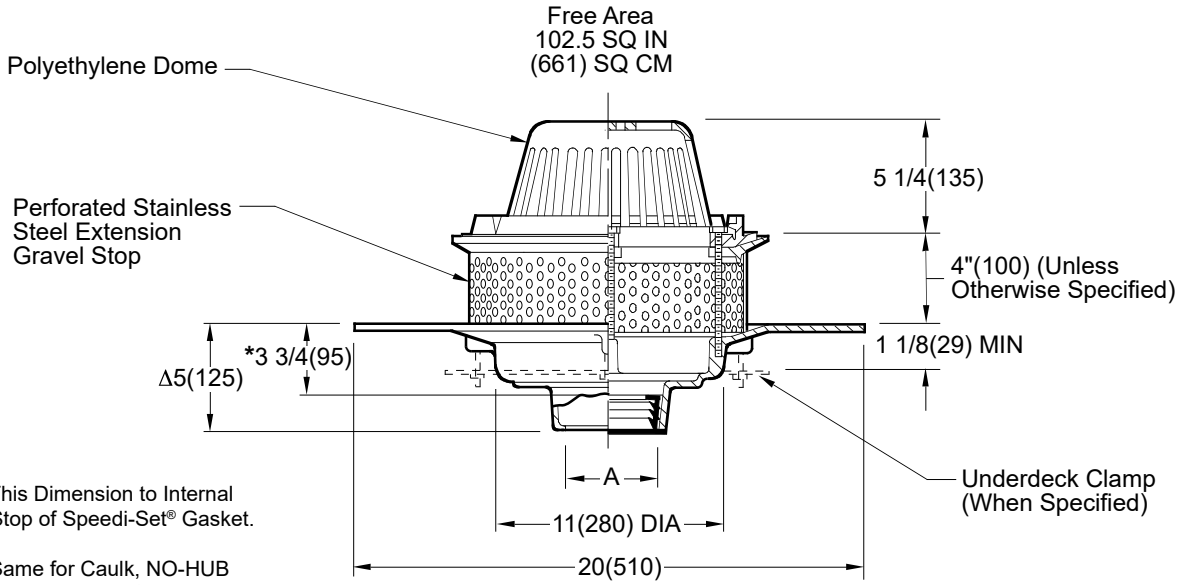

*This Dimension to Internal Stop of Speedi-Set® Gasket.

ΔSame for Caulk, NO-HUB and Speedi-Set®, 3 3/4(95) for Threaded

A (Pipe Size) = 02(50), 03(75), 04(100), 05(125) or 06(150)

- ☐ Fig. 1018C . . . . . CAULK OUTLET
- ☐ Fig. 1018Y . . . . . NO-HUB OUTLET
- ☐ Fig. 1018T . . . . . THREADED OUTLET

REGULARLY FURNISHED:
Duco Cast Iron Wide Flange Body with Flashing Clamp, Perforated Stainless Steel Extension, Gravel Stop and Polyethylene Dome.

VARIATIONS:
- ☐ Expansion Joint (Specify Fig. 1710)
- ☐ Higher Gravel Stop -HGS (Specify Height)
- ☐ "L" Shaped Underdeck Clamp -CL
- ☐ L Speedi-Set® Service Weight 02(50), 03(75) & 04"(100) sizes only
- ☐ LXH Speedi-Set® Extra Heavy 02(50), 03(75) & 04"(100) sizes only
- ☐ Underdeck Clamp -C
- ☐ Vandal Proof Dome -U
- ☐ Secondary Flashing Clamp -C2

OPTIONAL MATERIALS:
- ▲ ☐ Aluminum Dome -AD
- ▲ ☐ Cast Iron Dome -CID
- ☐ Galvanized Cast Iron Body and Collar -G
- ▲ ☐ Galvanized Cast Iron Dome -CIDG
- ▲ ☐ Rough Bronze Dome -RBD

▲Optional domes' free area are as follows:

Aluminum	98 (632)
Cast Iron	80 (516)
Bronze	95 (613)

NOTE: Dimensions shown in parentheses are in millimeters.

REV.	DATE	DESCRIPTION	BY	CKD. BY
R	9-27-23	Removed Function	HS	CL
Q	3-7-23	Added ® to "Speedi-Set"	KK	CL
P	7-30-19	Removed NOTE	MW	CL
N	7-25-18	Rev. Var., Add Threaded Outlet	TBW	CL

WEIGHT POUNDS | VOLUME CUBIC FEET | FIGURE NUMBER **1018**

DRAWING NUMBER S1018 | SIZE A | SCALE: NONE | DATE: 5-24-85 | APPROVED BY: JD | CHECKED BY: VGD | DRAWN BY: CR | FIGURE NUMBER 1018 | R

WE CAN ASSUME NO RESPONSIBILITY FOR USE OF SUPERSEDED OR VOID DATA
DIMENSIONS ARE SUBJECT TO MANUFACTURERS TOLERANCE AND CHANGE WITHOUT NOTICE

WARNING: Cancer and Reproductive Harm - www.P65Warnings.ca.gov