Division of Acorn Engineering Company®

A MEMBER OF MORRIS GROUP INTERNATIONAL

Ligature Resistant Mirror, Handicap, Front Mount

Mirror is designed with sloping edges making it great for Ligature Resistant applications. Mirror is type 400-series stainless steel polished to a mirror finish. Frame is constructed of type 304 stainless steel with exposed surfaces powder coated white or polished to a satin finish. Furnished with tamper-resistant screws for use with installer provided wall anchors.

Note: Screws provided have Machine Screw Thread and may not be suitable for all Wall types. When required, Installer shall provide alternate Screw type and Wall Anchors to suit Wall construction.

WH1813-SLPT

MODEL NUMBER AND OPTIONS SELECTION:

BASE MODEL NUMBER

- ❑ WH1813-SLPT — Ligature Resistant Mirror (White)
- ❑ WH1813-SLPT-SS — Ligature Resistant Mirror (Stainless Steel)

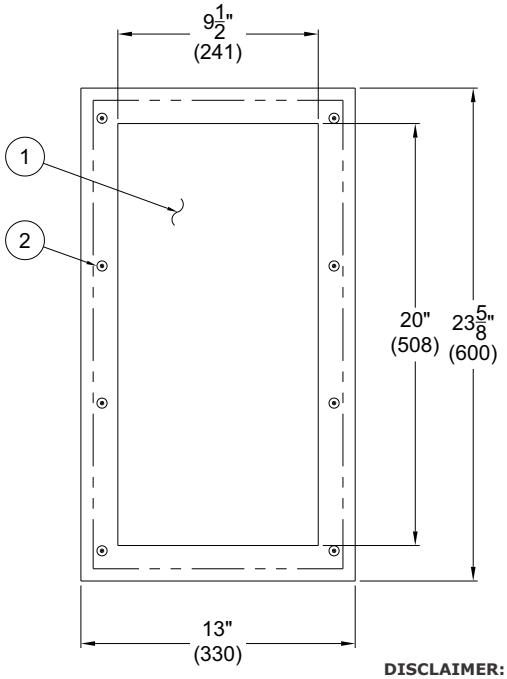

NOTES:
1. Stainless Steel Mirror
2. 1/4”-20 UNC Tamper Resistant Screws
3. Wall Mounting Anchors (By Others)

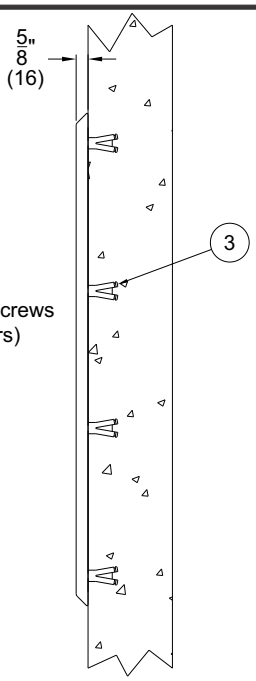

DISCLAIMER:
This product is designed to decrease the probability that it may be utilized as an apparatus for ligature. It is not a replacement for professionals who are trained in the proper evaluation, management and supervision of persons at risk of suicide.

Recyclable Product

⚠ WARNING: Cancer and Reproductive Harm - www.P65Warnings.ca.gov

All dimensions are nominal and subject to manufacturer's change without notice. Whitehall assumes no responsibility fo use of void or superseded data © Whitehall Manufacturing, Member of Morris Group International.
Please visit ***www.whitehallmfg.com*** for most current specifications.

SELECTION SUMMARY & APPROVAL FOR MANUFACTURING

Model Number & Options_____Quantity_____
Company_____Date_____
Contact_____Title_____
Approval for Manufacturing/Signature_____