SMITH® JAY R. SMITH MFG. CO.®
MEMBER OF MORRIS GROUP INTERNATIONAL
POST OFFICE BOX 3237
MONTGOMERY, ALABAMA 36109-0237 (USA)
TEL: 334-277-8520 FAX: 888-377-7818 www.jrsmith.com

CUSTOMER DRIVEN SINCE 1926

MEMBER OF:

LOCATION

Snap-N-Go!® FLOOR OR SHOWER DRAIN

WITH ADJUSTABLE ROUND STRAINER HEAD AND ROUGH ADJUSTMENT SLEEVE

General service floor drain for use in showers, toilets, kitchens and other finished areas where foot traffic is expected.

Load Rating: Light Duty having a Safe Live (Static) Load less than 2,000 lbs. (900 kg) per ASME A112.6.3 Floor Drain Standard. For the specific Safe Live Load rating of any grate, contact the Smith representative or factory direct.

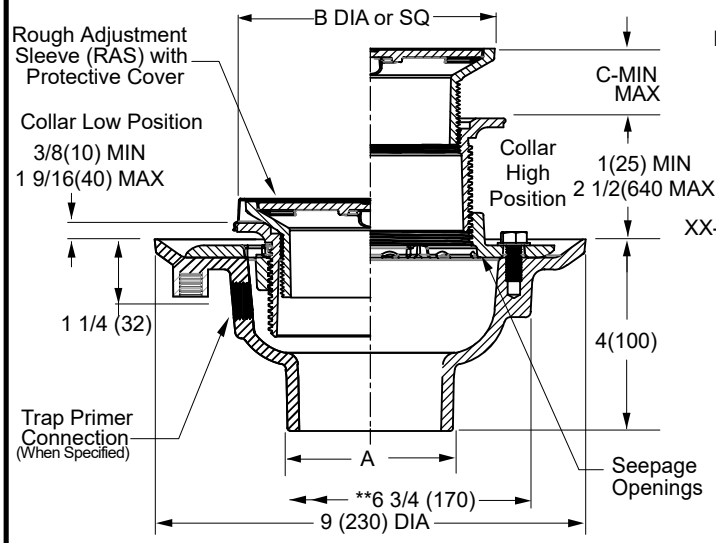

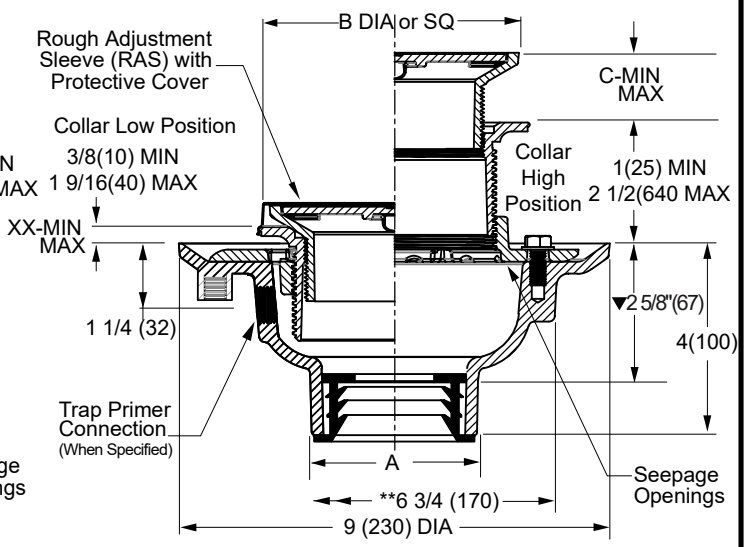

A (Pipe Size) = 02(50), 03(75), 04(100), 05(125) or 06(150)

NO-HUB OUTLET

- ☐ **Fig. 2005RAS-Y . . . . . (A) ROUND TOP**
- ☐ **Fig. 2005RAS-Y . . . . . (B) SQUARE TOP**

SPEEDI-SET® OUTLET

- ☐ **Fig. 2005RAS-L . . . . . (A) ROUND TOP**
- ☐ **Fig. 2005RAS-L . . . . . (B) SQUARE TOP**

▼ This dimension to internal stop of speedi-set gasket.
* Collar is reversible to obtain extreme high and low strainer positions.
** MIN 6 3/4"(170) hole required for core drilled application.

	Strainer Size	Strainer Adjustment		Free Area SQ IN (SQ CM)
	B DIA or SQ	C MIN	C MAX	
	A05	1/2(13)	1 1/2(38)	7(45)
	A06	1/2(13)	1 1/2(38)	9(58)
	B05	1/2(13)	1 1/2(38)	6.5(42)
	B06	5/8(16)	1 5/8(41)	12.5(81)

REGULARLY FURNISHED:
Duco Cast Iron Body with Flashing Collar and Adjustable Strainer Head as Indicated by Suffix Letter Selected with Rough Adjustment Sleeve (RAS).

VARIATIONS:
- ☐ L Speedi-Set Service Weight (02, 03 & 04" sizes only)
- ☐ LXH Speedi-Set Extra Heavy (02, 03 & 04" sizes only)
- ☐ Trap Primer Connection -P050 ½" (13) or -P075 ¾"(19)

OPTIONAL MATERIALS:
- ☐ Chrome Plated Strainer -CP
- ☐ Nickel Bronze Stainer -NB
- ☐ Polished Bronze Strainer -PB

U.S. PATENT 10,683,654

CANADIAN PATENT 3,021,711

NOTE: Dimensions shown in parentheses are in millimeters.

REV.	DATE	DESCRIPTION	BY	CKD. BY
B	3-11-25	Revised DWG and Charts	HS	CL
A	6-5-24	Added "Snap-N-Go!®"	HS	CL

WEIGHT POUNDS | VOLUME CUBIC FEET

FIGURE NUMBER **2005-RAS**

DRAWING NUMBER s2005-RAS | SIZE A | SCALE: NONE | DATE: 04-16-2024 | APPROVED BY: CL | CHECKED BY: CL | DRAWN BY: KK | FIGURE NUMBER 2005-RAS | B

DIMENSIONS ARE SUBJECT TO MANUFACTURERS TOLERANCE AND CHANGE WITHOUT NOTICE
WE CAN ASSUME NO RESPONSIBILITY FOR USE OF SUPERSEDED OR VOID DATA

WARNING: Cancer and Reproductive Harm - www.P65Warnings.ca.gov