REFERENCE DRAWINGS	
INSTALLATION	DRAWING
MXTP VALVE TEMPERATURE ADJUSTMENT	9912–252–002
REPAIR PARTS	DRAWING
SPRAY NOZZLES –ELBOW	9971–001–001
SPRAY NOZZLES –STRAIGHT	9971–000–001
MULTI–PURPOSE WRENCH	9951–000–001

PRODUCT ROUGH–IN AND INSTALLATION REQUIRES THE FOLLOWING MATERIALS, NOT SUPPLIED BY ACORN ENGINEERING COMPANY.

- 1–1/2" P–TRAP, DRAIN LINE AND WASTE FITTINGS
- SUITABLE FLOOR AND WALL ANCHORS FOR FIXTURE MOUNTING
- FLEXIBLE SUPPLY CONNECTIONS TO 1/2" NPT VALVE INLETS
- 3/4" NCT SUPPLIES TO VALVE ASSEMBLY

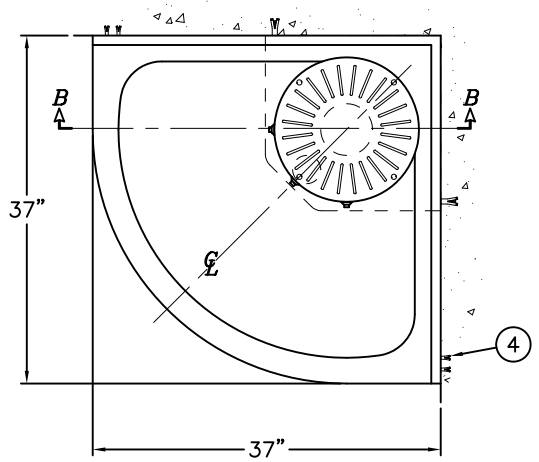

DETAIL "A"

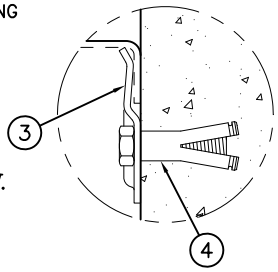

SECTION "BB" OR LEFT SIDE ROUGH SHOWN. RIGHT SIDE IS OPPOISTE.

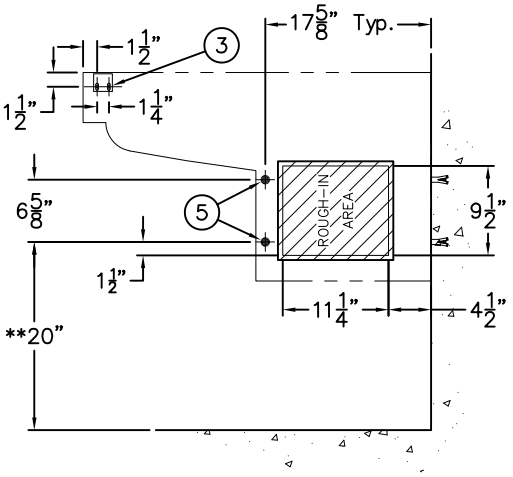

VALVE DETAIL

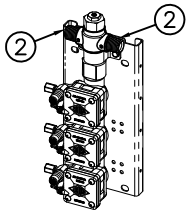

SCALE 2X

THREE STATION SHOWN FOR REFERENCE ONLY.

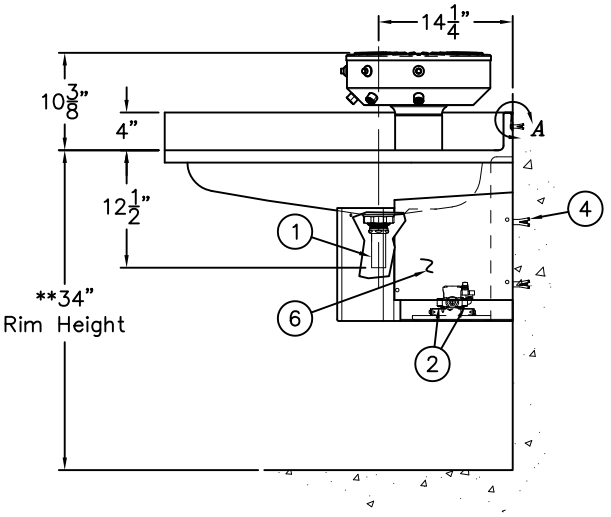

ROUGH-IN FOR THE FOLLOWING:

- BASIN WASTE: 1–1/2" O.D. TAILPIECE ① FOR P–TRAP ASSEMBLY BY OTHERS.
- HOT & COLD SUPPLIES FOR MIXING VALVE WITH 1/2" NPTE VALVE INLETS ②.
- S–CLIPS: EACH S–CLIP ③ HAS (2) ø1/4" x 3/4" LONG SLOTS FOR INSTALLER PROVIDED ANCHORING HARDWARE ④.
- FIXTURE WALL ANCHORING: ø1/2" PUNCHING ⑤ FOR INSTALLER PROVIDED WALL ANCHORS AND ANCHORING HARDWARE ④.

INSTALLATION INSTRUCTIONS:

A– INSTALL S–CLIPS ③.
B– REMOVE PEDESTAL ACCESS COVERS ⑥.
C– ANCHOR FIXTURE TO WALL USING INSTALLER PROVIDED ANCHORING HARDWARE ④.
D– MAKE UP INSTALLER PROVIDED WASTE CONNECTIONS TO TAILPIECE ① PROVIDED.
E– FLUSH SUPPLY LINES PRIOR TO MAKING UP CONNECTIONS TO 1/2" NPT VALVE INLET CONNECTIONS ②.
F– ADJUST MIXING VALVE TO DESIRED TEMPERATURE. REFER TO DRAWING 9912–252–001.
G– SET TIMING CYCLE ON METERING VALVES; SEE DRAWING 9955–000–003 FOR DETAILS AND INSTRUCTIONS.
H– REINSTALL PEDESTAL ACCESS COVERS ⑥.

NOTE: REFER TO A.D.A. ACCESSIBILITY GUIDELINES FOR COMPLETE INSTALLATION REQUIREMENTS.

NOTE: FOR UNITS WITH OPTIONAL -JH JUNIOR RIM HEIGHT, SUBTRACT DIFFERENCE FROM ALL VERTICAL DIMENSIONS INDICATED WITH **.

FOR -SO SENSOR OPERATION: SUPPLY 120VAC, 60 Hz, 3 AMPS (MAX) POWER TO FACTORY INSTALLED TRANSFORMER (WITH JUNCTION BOX). LOCATE ELECTRICAL STUB OUT WITHIN SHADED ROUGH–IN AREA.

NOTE: FIXTURE MUST BE EARTH GROUNDED PER N.E.C. (NATIONAL ELECTRICAL CODE). TRANSFORMER MUST BE WIRED TO A GFI PROTECTED CIRCUIT.

NOTE:
MAXIMUM RECOMMENDED WORKING WATER PRESSURE IS 100 PSI; TEMPERATURE IS 130°F; OUTLET TEMPERATURE IS RECOMMENDED AT A MAXIMUM OF 105°F.

WARNING:
PRIOR TO MAKING INSTALLATION, SUPPLY LINES MUST BE FLUSHED OF ALL FOREIGN MATERIAL SUCH AS PIPE DOPE, CHIPS, ETC. VALVE MUST BE DRAINED PRIOR TO BEING SUBJECTED TO FREEZING TEMPERATURES. MAXIMUM RECOMMENDED OUTLET WATER TEMPERATURE IS 105°F.

ACORN ENGINEERING COMPANY
P.O. BOX 3527 Industry, CA 91744
15125 Proctor Ave Industry, CA 91746
(626) 336–4561 FAX (626) 961–2200

TITLE		
CORNER WASHFOUNTAIN, #3442-1, #3443ADA-1		
MANUFACTURE DATE	DATE ISSUED	DRAWING NUMBER
OCTOBER 1999 TO PRESENT	**05/24/10**	**9912-090-004**
	DATE REVISED **03/25/14 C**	

3/84

REFERENCE DRAWINGS	
INSTALLATION	DRAWING
MXTP VALVE TEMPERATURE ADJUSTMENT	9912–252–002
REPAIR PARTS	DRAWING
SPRAY NOZZLES –ELBOW	9971–001–001
SPRAY NOZZLES –STRAIGHT	9971–000–001
MULTI–PURPOSE WRENCH	9951–000–001

PRODUCT ROUGH–IN AND INSTALLATION REQUIRES THE FOLLOWING MATERIALS, NOT SUPPLIED BY ACORN ENGINEERING COMPANY.

- 1–1/2" P–TRAP, DRAIN LINE AND WASTE FITTINGS
- SUITABLE FLOOR AND WALL ANCHORS FOR FIXTURE MOUNTING
- FLEXIBLE SUPPLY CONNECTIONS TO 1/2" NPT VALVE INLETS
- 3/4" NCT SUPPLIES TO VALVE ASSEMBLY

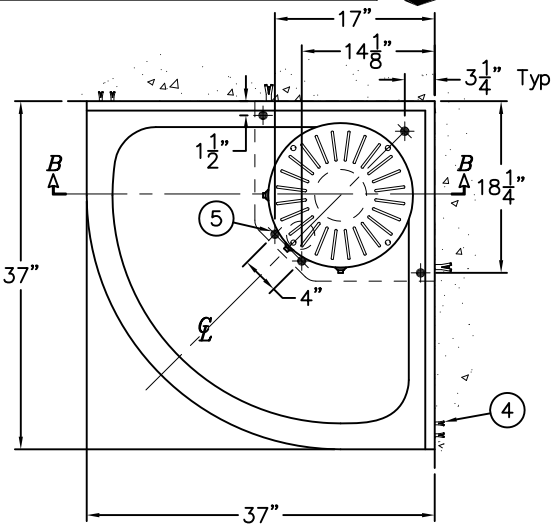

DETAIL "A"

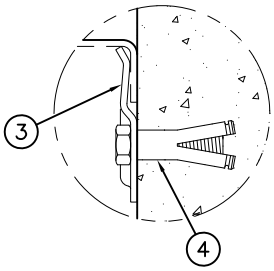

SECTION "BB"; LEFT SIDE ROUGH SHOWN. RIGHT SIDE IS OPPOISTE.

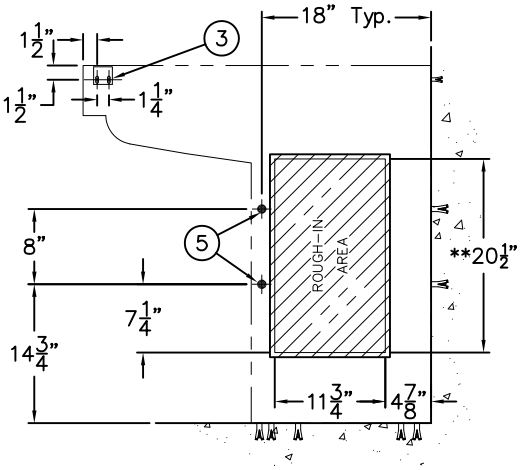

VALVE DETAIL

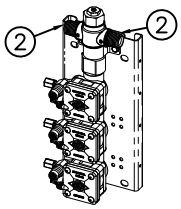

SCALE 2X

THREE STATION SHOWN FOR REFERENCE ONLY.

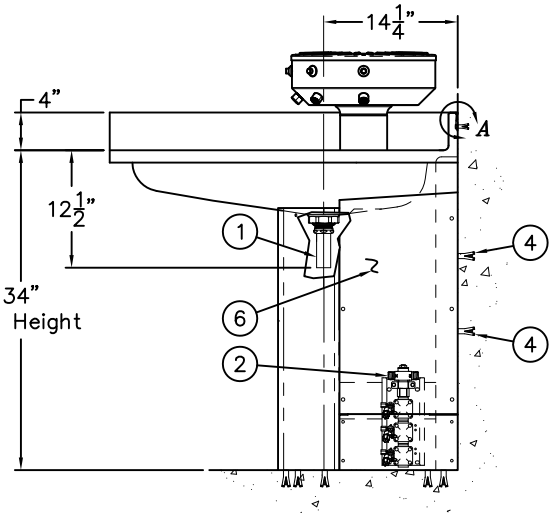

ROUGH-IN FOR THE FOLLOWING:

- BASIN WASTE: 1–1/2" O.D. TAILPIECE ① FOR P–TRAP ASSEMBLY BY OTHERS.
- HOT & COLD SUPPLIES FOR MIXING VALVE WITH 1/2" NPTE VALVE INLETS ②.
- S–CLIPS: EACH S–CLIP ③ HAS (2) ø1/4" x 3/4" LONG SLOTS FOR INSTALLER PROVIDED ANCHORING HARDWARE ④.
- FIXTURE WALL ANCHORING: ø1/2" PUNCHING ⑤ FOR INSTALLER PROVIDED WALL & FLOOR ANCHORS AND ANCHORING HARDWARE ④.

INSTALLATION INSTRUCTIONS:

A– INSTALL S–CLIPS ③.
B– REMOVE PEDESTAL ACCESS COVERS ⑥.
C– ANCHOR FIXTURE TO WALL & FLOOR USING INSTALLER PROVIDED ANCHORING HARDWARE ④.
D– MAKE UP INSTALLER PROVIDED WASTE CONNECTIONS TO TAILPIECE ① PROVIDED.
E– FLUSH SUPPLY LINES PRIOR TO MAKING UP CONNECTIONS TO 1/2" NPT VALVE INLET CONNECTIONS ②.
F– ADJUST MIXING VALVE TO DESIRED TEMPERATURE. REFER TO DRAWING 9912–252–001.
G– SET TIMING CYCLE ON METERING VALVES; SEE DRAWING 9955–000–003 FOR DETAILS AND INSTRUCTIONS.
H– REINSTALL PEDESTAL ACCESS COVERS ⑥.

NOTE: REFER TO A.D.A. ACCESSIBILITY GUIDELINES FOR COMPLETE INSTALLATION REQUIREMENTS.

NOTE: FOR UNITS WITH OPTIONAL -JH JUNIOR RIM HEIGHT, SUBTRACT DIFFERENCE FROM ALL VERTICAL DIMENSIONS INDICATED WITH **.

FOR -SO SENSOR OPERATION: SUPPLY 120VAC, 60 Hz, 3 AMPS (MAX) POWER TO FACTORY INSTALLED TRANSFORMER (WITH JUNCTION BOX). LOCATE ELECTRICAL STUB OUT WITHIN SHADED ROUGH–IN AREA.

NOTE: FIXTURE MUST BE EARTH GROUNDED PER N.E.C. (NATIONAL ELECTRICAL CODE). TRANSFORMER MUST BE WIRED TO A GFI PROTECTED CIRCUIT.

NOTE:
MAXIMUM RECOMMENDED WORKING WATER PRESSURE IS 100 PSI; TEMPERATURE IS 130°F; OUTLET TEMPERATURE IS RECOMMENDED AT A MAXIMUM OF 105°F.

WARNING:
PRIOR TO MAKING INSTALLATION, SUPPLY LINES MUST BE FLUSHED OF ALL FOREIGN MATERIAL SUCH AS PIPE DOPE, CHIPS, ETC. VALVE MUST BE DRAINED PRIOR TO BEING SUBJECTED TO FREEZING TEMPERATURES. MAXIMUM RECOMMENDED OUTLET WATER TEMPERATURE IS 105°F.

ACORN ENGINEERING COMPANY
P.O. BOX 3527 Industry, CA 91744
15125 Proctor Ave Industry, CA 91746
(626) 336–4561 FAX (626) 961–2200

TITLE		
CORNER WASHFOUNTAIN, #3442-2, #3443ADA-2		
MANUFACTURE DATE	DATE ISSUED	DRAWING NUMBER
OCTOBER 1999 TO PRESENT	**05/24/10**	**9912-080-004**
	DATE REVISED **03/25/14 B**	

3/84

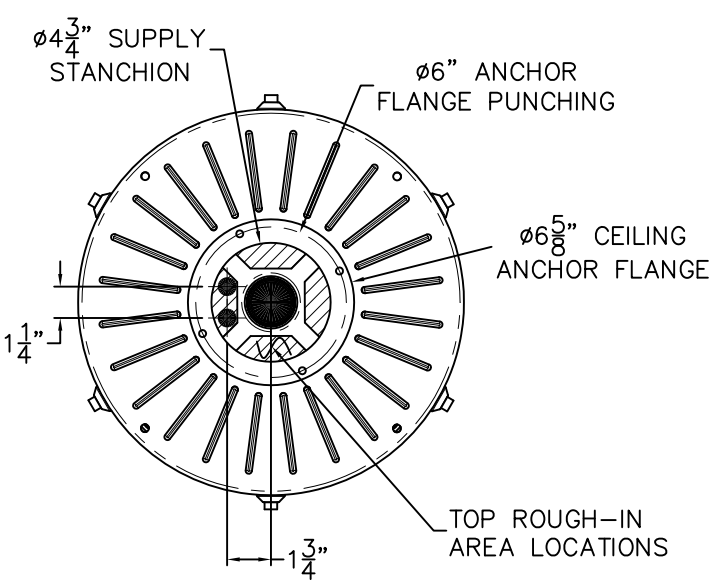

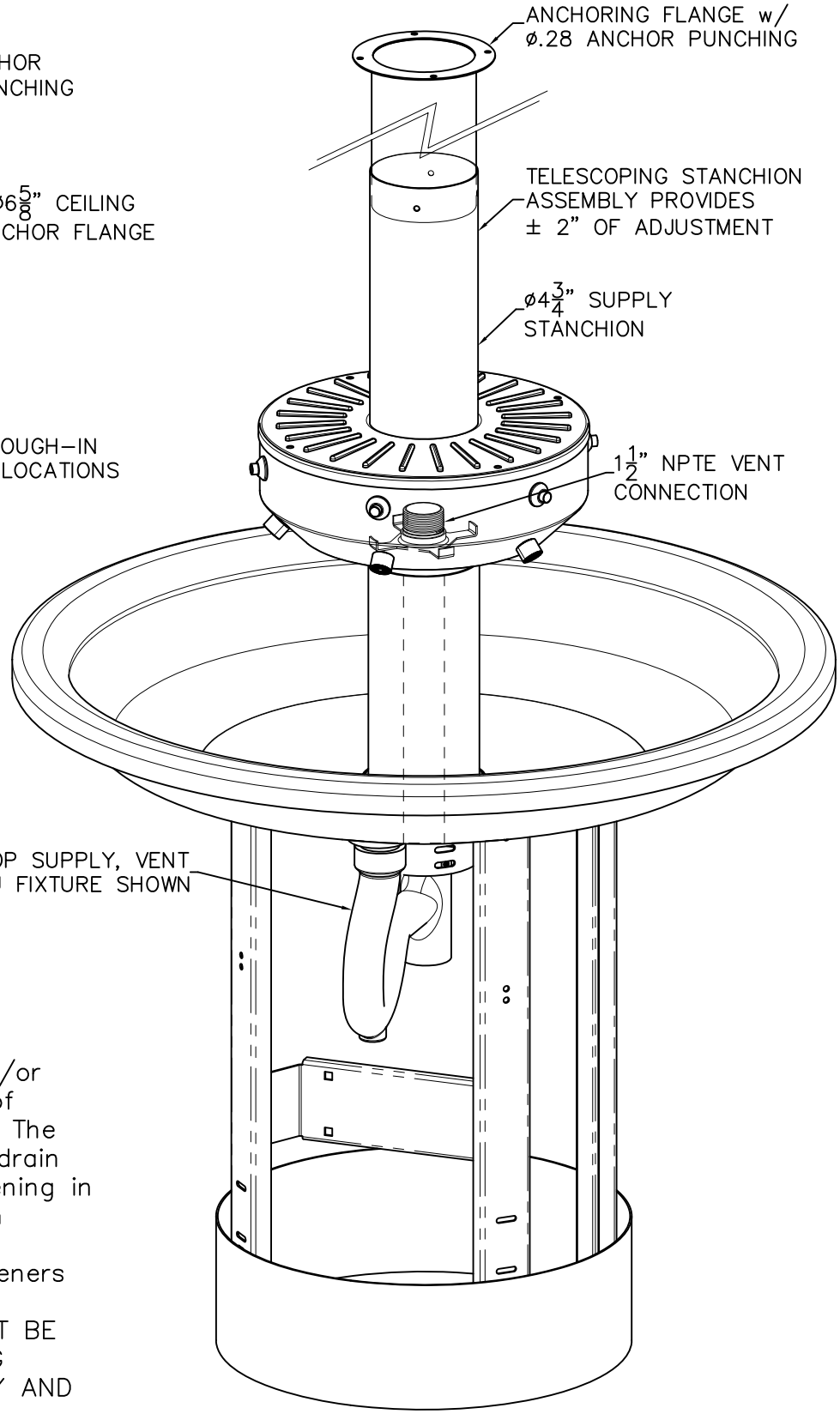

Optional -SC Supply Cover is recommended on top supply and/or vent thru models as a method of concealing supply or vent piping. The lower assembly attaches to the drain body and passes through an opening in the sprayhead. The upper portion allows for 2" of adjustment and attaches to the ceiling with fasteners and anchors by others.
IMPORTANT: SUPPLY COVER MUST BE INSTALLED PRIOR TO CONNECTING SUPPLY OR VENT PIPING. SUPPLY AND VENT PIPE BY OTHERS.

ACORN ENGINEERING COMPANY
P.O. BOX 3527 Industry, CA 91744
15125 Proctor Ave Industry, CA 91746
(626) 336-4561 FAX (626) 961-2200

TITLE		
-SC SUPPLY & VENT COVER DETAIL		
MANUFACTURE DATE	DATE ISSUED	DRAWING NUMBER
DECEMBER 1986 TO PRESENT	**03/01/94**	**9912-251-001**
	DATE REVISED **06/13/13**	

REFERENCE DRAWINGS	
SOAP DISPENSERS	9912-260-002
SUPPLY & VENT COVERS	9912-251-001

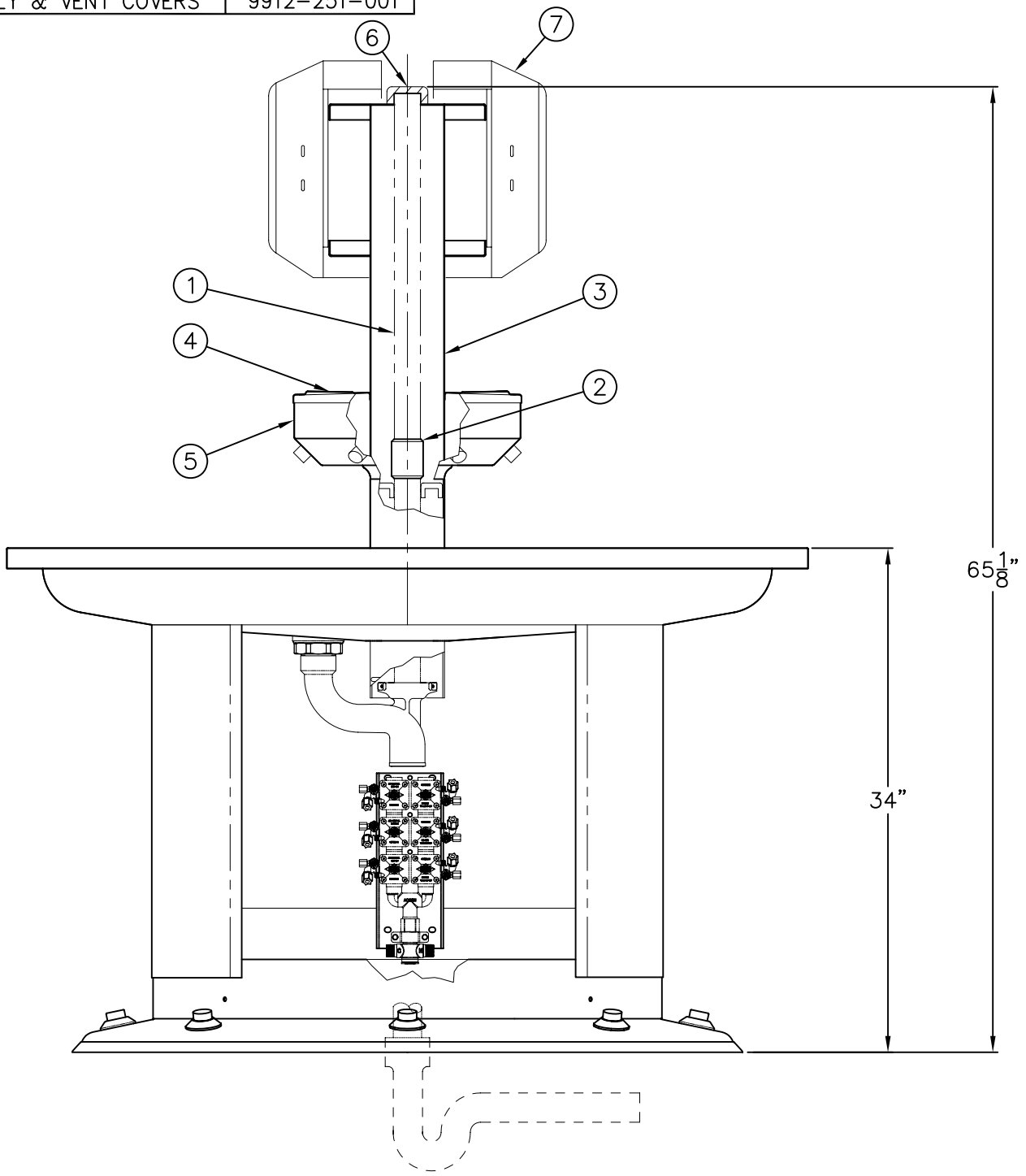

INSTALLATION INSTRUCTIONS

A- SCREW 21-1/2" LONG REINFORCING PIPE (1) INTO COUPLING (2).

B- INSERT TOWEL DISPENSER BRACKET ASSEMBLY (3) OVER REINFORCING PIPE (1).

C- ATTACH LID (4) TO SPRAYHEAD (5) WITH FASTENERS PROVIDED. INSTALL PIPE CAP (6).

D- ATTACH TOWEL DISPENSER (7) (FASTENERS PROVIDED).

ACORN ENGINEERING COMPANY
P.O. BOX 3527 INDUSTRY, CA. 91744
(626) 336-4561 FAX (626) 961-2200

TITLE		
TOWEL DISPENSER BRACKET INSTALLATION		
MANUFACTURE DATE	DATE ISSUED	DRAWING NUMBER
AUG 1985 TO PRESENT	**12/1/89**	**9912-250-002**
	DATE REVISED **05/21/10**	

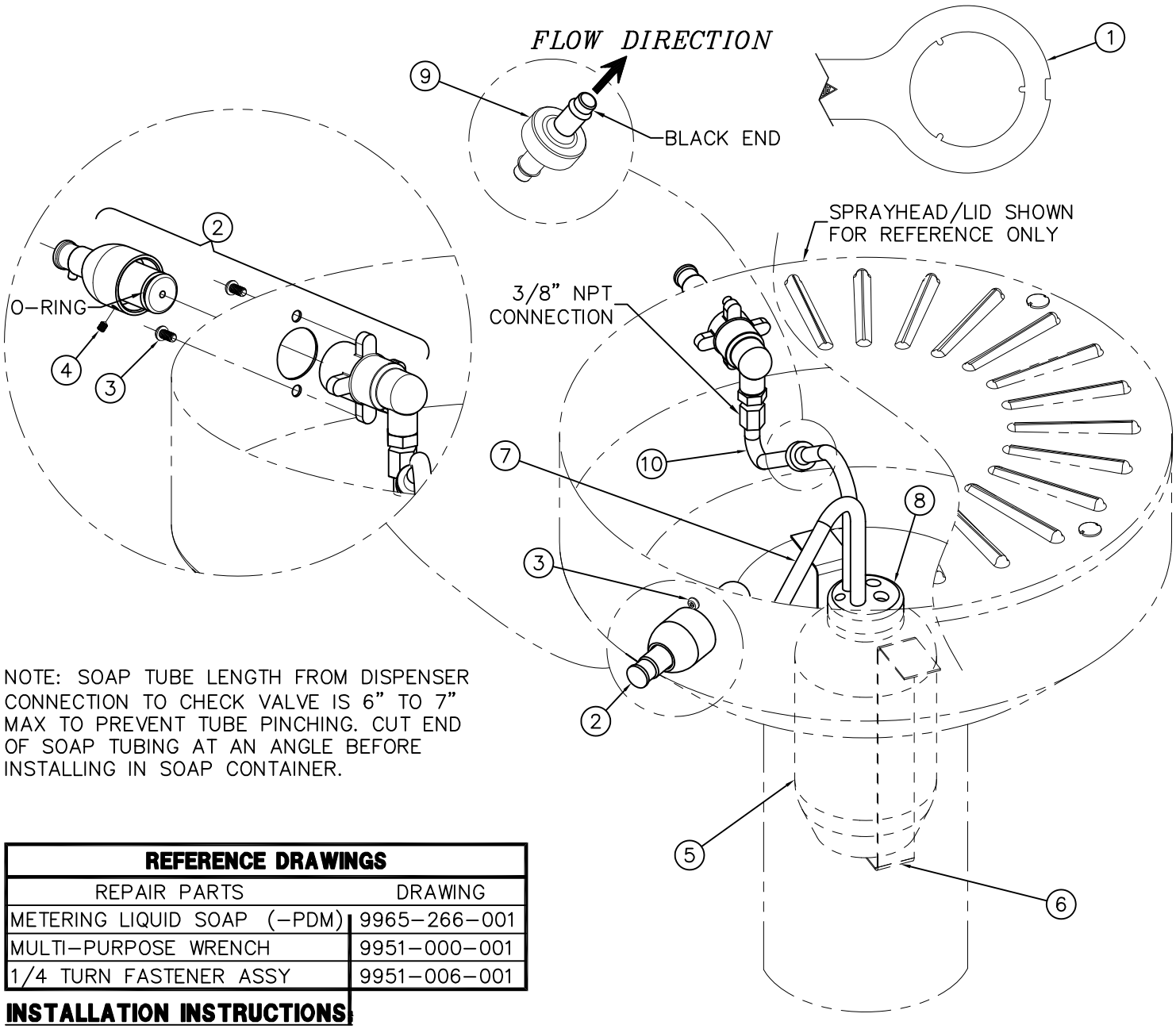

NOTE: SOAP TUBE LENGTH FROM DISPENSER CONNECTION TO CHECK VALVE IS 6" TO 7" MAX TO PREVENT TUBE PINCHING. CUT END OF SOAP TUBING AT AN ANGLE BEFORE INSTALLING IN SOAP CONTAINER.

REFERENCE DRAWINGS	
REPAIR PARTS	DRAWING
METERING LIQUID SOAP (-PDM)	9965-266-001
MULTI-PURPOSE WRENCH	9951-000-001
1/4 TURN FASTENER ASSY	9951-006-001

INSTALLATION INSTRUCTIONS

A- WITH WRENCH (1) PROVIDED REMOVE THE SPRAYHEAD LID.

B- ASSEMBLE LIQUID PUMP SOAP DISPENSER (2) AND MOUNT ONTO SPRAYHEAD AS SHOWN ABOVE USING CENTER SET SCREW (3) AND POINT HEAD SET SCREW (4).

D- PLACE LIQUID SOAP CONTAINER (5) INSIDE SPRAYHEAD ONTO THE LIQUID SOAP CONTAINER BRACKET (6).

E- INSERT 3/8" OD VINYL TUBE (7) INTO LIQUID SOAP CONTAINER (5) THROUGH HOLES ON CONTAINER LID (8) AND CONNECT OTHER END TO CHECK VALVE (9).

F- CONNECT 3/8" OD VINYL TUBE (10) FROM CHECK VALVE (9) TO LIQUID SOAP PUMP DISPENSER (2).

G- FILL LIQUID SOAP CONTAINER (5) WITH LIQUID SOAP AND PRIME LIQUID SOAP PUMP (2).

H- SECURE SPRAYHEAD LID USING WRENCH PROVIDED (1) & TURNING FASTENERS (2) 1/4 TURN CLOCKWISE.

ACORN ENGINEERING COMPANY
P.O. BOX 3527 Industry, CA 91744
15125 Proctor Ave Industry, CA 91746
(626) 336-4561 FAX (626) 961-2200

TITLE		
-PDM METERING LIQUID SOAP INSTALLATION DETAIL		
MANUFACTURE DATE	DATE ISSUED	DRAWING NUMBER
MARCH 2013 TO PRESENT	**03/20/13**	**9912-263-001**
	DATE REVISED	

REFERENCE DRAWINGS	
REPAIR PARTS	DRAWING
POWDERED SOAP (–DP)	9965–200–001
LOTION SOAP (–DV)	9965–230–002
METERING LIQUID SOAP (–PDM)	9965–266–001
MULTI–PURPOSE WRENCH	9951–000–001
1/4 TURN FASTENER ASSY	9951–006–001

NOTE:
WHEN RETROFITTING TO A UNIT WITH A TOP SUPPLY OR VENT, ALL THROUGH TOP CONNECTIONS MUST BE DISCONNECTED PRIOR TO INSTALLATION.

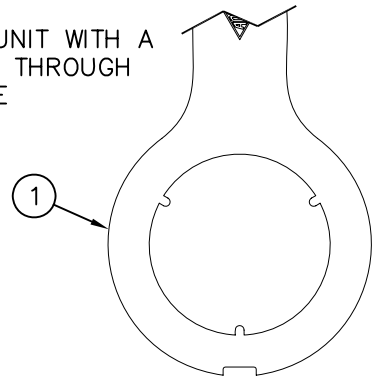

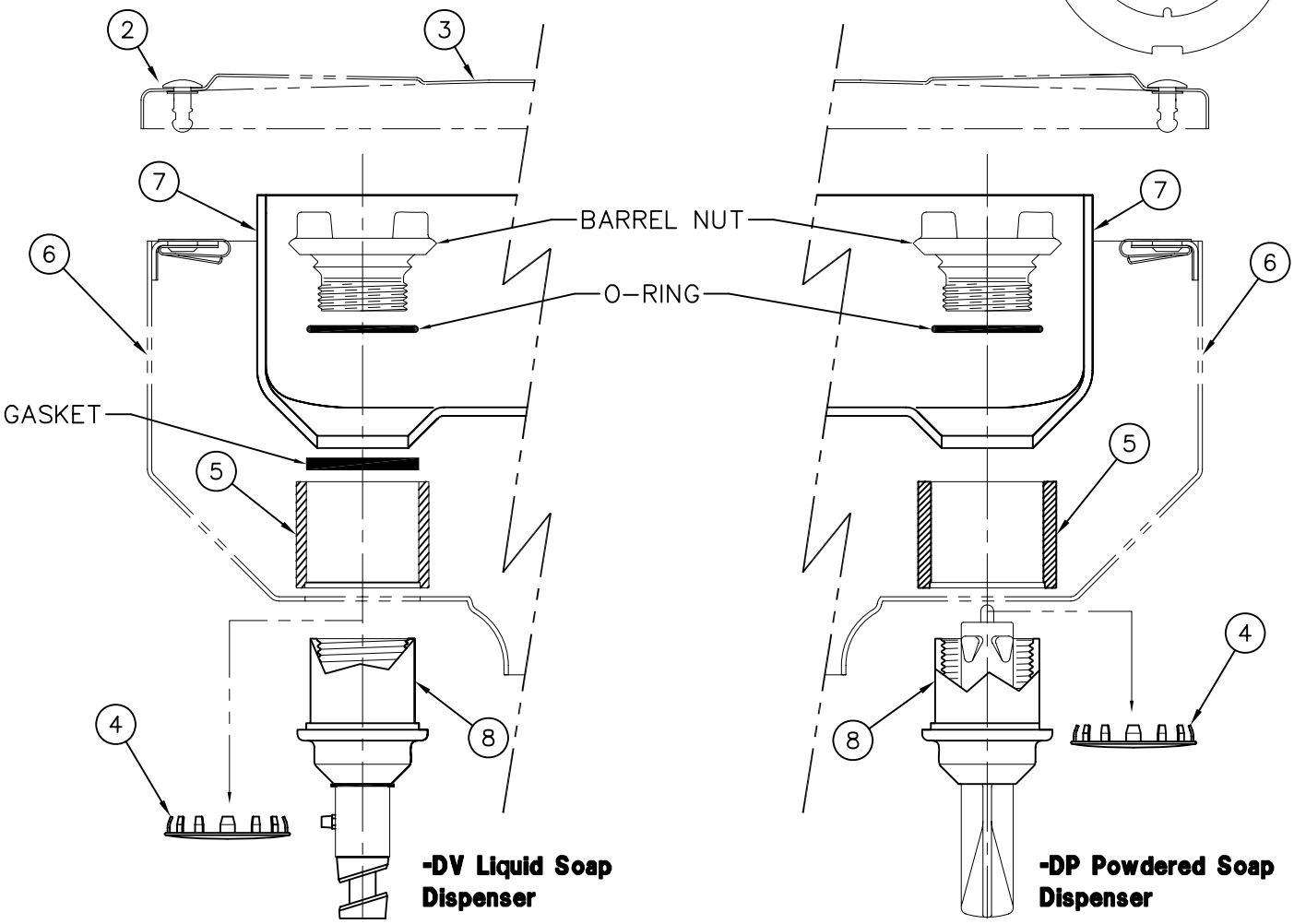

SOAP DISPENSER/TANK INSTALLATION DETAIL

A– WITH WRENCH (1) PROVIDED GIVE LID FASTENERS (2) A QUARTER TURN COUNTERCLOCKWISE AND REMOVE LID (3).

B– REMOVE SOAP DISPENSER PLUGS (4). (DISCARD)

C– POSITION BARREL STANDOFFS (5) OVER HOLES IN SPRAYHEAD (6).

D– PLACE SOAP TANK (7) INSIDE SPRAYHEAD ALIGNING OPENINGS IN TANK WITH STANDOFFS (5).

E– ASSEMBLE SOAP DISPENSERS (8) FROM INSIDE SOAP TANK AND BELOW SPRAYHEAD AS SHOWN ABOVE.

F– FILL SOAP TANK (7) WITH SOAP.

G– SECURE LID (3) USING SPECIAL WRENCH (1) & TURNING FASTENERS (2) 1/4 TURN CLOCKWISE.

ACORN ENGINEERING COMPANY
P.O. BOX 3527 INDUSTRY, CA. 91744
(626) 336–4561 FAX (626) 961–2200

TITLE		
SOAP DISPENSER/TANK INSTALLATION DETAIL		
MANUFACTURE DATE	DATE ISSUED	DRAWING NUMBER
MARCH 1987 TO PRESENT	**08/24/09**	**9912-260-002**
	DATE REVISED	

3/8

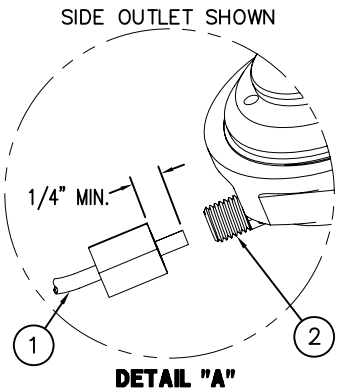

DETAIL "A"

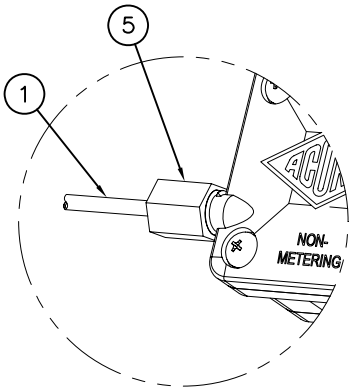

DETAIL "B"

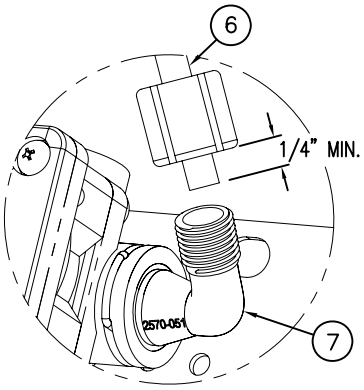

DETAIL "C"

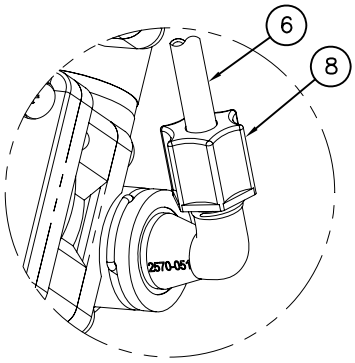

DETAIL "D"

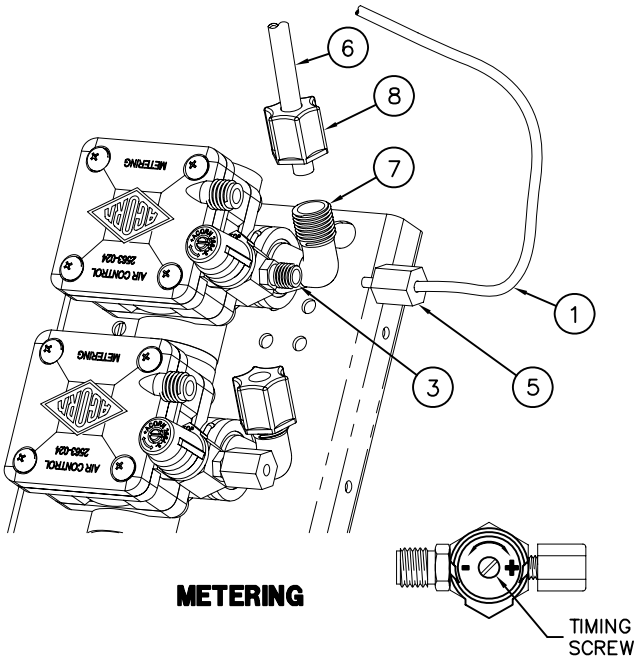

METERING

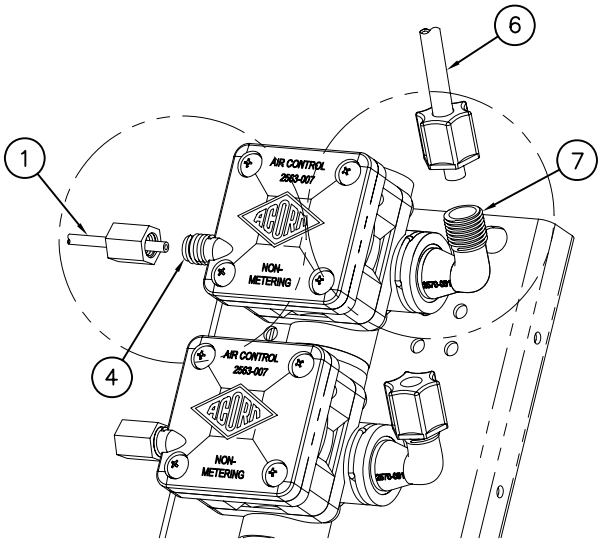

NON-METERING
DIRECT ACTING

TIMING IS ADJUSTABLE FROM 5 TO 60 SECONDS AND IS ACCOMPLISHED BY ROTATING TIMING SCREW. TURING THE SCREW CLOCKWISE INCREASES WHILE COUNTERCLOCKWISE DECREASES TIMING.

REFERENCE DRAWINGS	
ASSEMBLIES	DRAWING
VALVE BODY	9955–006–003
CHECKSTOP	9956–040–003
FIXTURE TRIM	9957–051–001
AIR-CONTROL SERVOMOTORS	
METERING	9955–000–003
NON–METERING	9955–001–003

INSTALLATION INSTRUCTIONS:

A– MOUNT FIXTURE IN ACCORDANCE TO MANUFACTURER'S INSTALLATION INSTRUCTIONS.

B– ASSEMBLE SPOUTS AND PUSHBUTTONS TO FIXTURE.

C– CONNECT 1/8" O.D. POLYETHYLENE AIR LINE ① TO PUSHBUTTON ②, AND VALVE TIMER ASSEMBLY ③ SEE DETAIL "A". NOTE: FOR DIRECT ACTING: ASSEMBLE TO AIR PORT ④, SEE DETAIL "B". HAND TIGHTEN FERRULE NUT ⑤ PROVIDED.

D– CONNECT 1/4" O.D. POLYETHYLENE WATER LINES ⑥ TO VALVE ASSEMBLY ELBOW ⑦ SEE DETAILS "C", AND "D". HAND TIGHTEN FERRULE NUT ⑧ PROVIDED.

E– AFTER THOROUGHLY FLUSHING SUPPLY LINES MAKE UP CONNECTIONS TO VALVE ASSEMBLY INLET(S) 1/2" NPTE OR 1/2" NPS FLEX HOSE AS REQUIRED.

NOTE:

1) ALL TUBING SHOULD BE CUT SQUARE AND BE FREE OF BURRS OR DEFORMITIES TO ENSURE A WATER TIGHT CONNECTION.
2) EXTEND TUBING AT LEAST 1/4" BEYOND FERRULE NUT BEFORE INSERTING TUBING INTO CONNECTION OPENING BEFORE TIGHTENING.
3) TUBING SHOULD BE FREE OF KINKS FOR PROPER OPERATION
4) MAXIMUM RECOMMENDED WORKING WATER PRESSURE IS 100 PSI; TEMPERATURE IS 130° F; OUTLET TEMPERATURE IS RECOMMENDED AT A MAXIMUM OF 105° F.

WARNING:
PRIOR TO MAKING INSTALLATION, SUPPLY LINES MUST BE FLUSHED OF ALL FOREIGN MATERIAL SUCH AS PIPE DOPE, CHIPS, SOLDER, ETC. VALVE MUST BE DRAINED PRIOR TO BEING SUBJECTED TO FREEZING TEMPERATURES. MAXIMUM RECOMMENDED OUTLET WATER TEMPERATURE IS 105° F.

ACORN ENGINEERING COMPANY
P.O. BOX 3527 INDUSTRY, CA. 91744
(626) 336–4561 FAX (626) 961–2200

TITLE		
HAND OPERATED AIR-CONTROL VALVE CONNECTIONS		
MANUFACTURE DATE	DATE ISSUED	DRAWING NUMBER
JANUARY 1999 TO PRESENT	**04/22/10**	**9905-006-001**
	DATE REVISED **10/11/10**	

REFERENCE DRAWINGS	
REPAIR PARTS	DRAWING
NON–METERING SERVOMOTOR (–F)	9955–001–003
METERING SERVOMOTOR (–H)	9955–000–003
AIR–CONTROL VALVE BODY	9975–090–001
CHECKSTOP (–ST Single Temp. Only)	9956–040–003
SENSOR/SOLENOID (–SO) (24VAC)	9955–015–002
SENSOR/SOLENOID/PPZ (–SO) (9VDC)	9955–019–002
HAND BUTTON	9957–300–001
FOOT BUTTON	9957–200–001

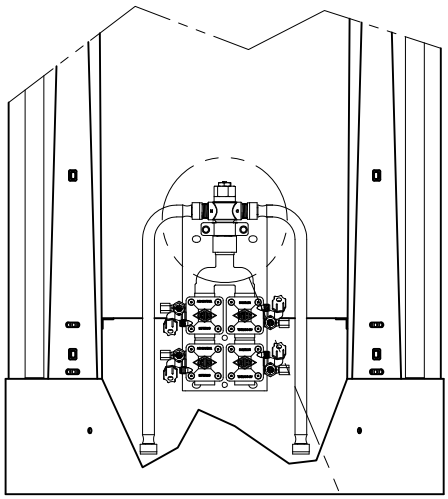

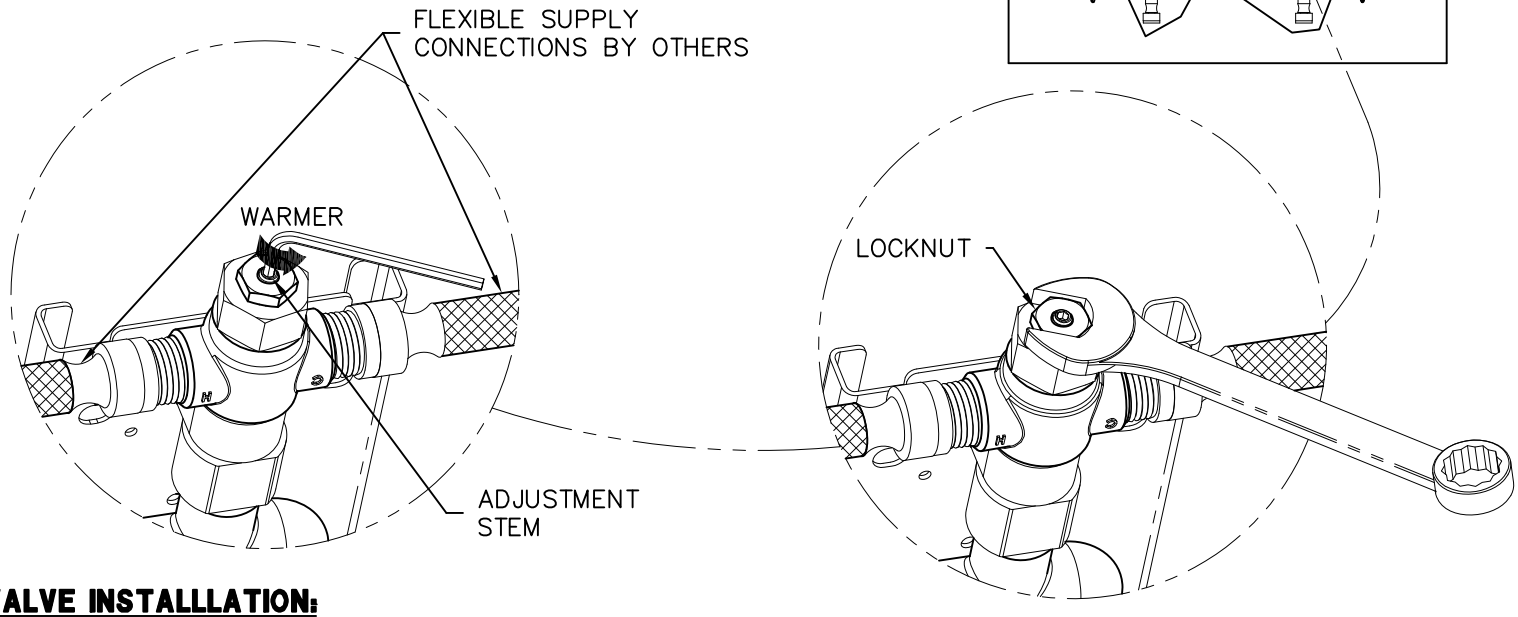

VALVE INSTALLLATION:

A– MX–T/P VALVES: AFTER THOROUGHLY FLUSHING SUPPLY LINES, MAKE UP CONNECTIONS TO SUPPLY STUB OUTS AND VALVE INLETS WITH INSTALLER PROVIDED FLEXIBLE HOSE. NOTE: MX–T/P VALVE SUPPLY INLETS ARE 1/2" NPTE.

B– OPTIONAL –ST (Single Temp): AFTER THOROUGHLY FLUSHING SUPPLY LINE, MAKE UP CONNECTION TO SUPPLY STUB OUT AND VALVE INLET WITH FLEXIBLE HOSE PROVIDED. NOTE: –ST VALVES INCLUDE FLEXIBLE HOSE WITH 1/2" NPSI CONNECTIONS. FLEXIBLE HOSE ENDS WILL ACCOMMODATE 1/2" NPT MALE ADAPTER.

C– SEE APPROPRIATE SERVOMOTOR REFERENCE DRAWINGS FOR VALVE DETAILS AND TIMING INSTRUCTIONS.

MX T/P TEMPERATURE VALVE ADJUSTMENT

D– LOOSEN LOCKNUT SHOWN.

E– TURN ON FIXTURE AND RUN WATER FOR AT LEAST 2 MINUTES. ALLOW WATER TO STABILIZE.

F– USE AN 1/8" ALLEN WRENCH TO TURN ADJUSTMENT STEM COUNTER–CLOCKWISE FOR WARMER OR CLOCKWISE FOR COOLER OUTLET WATER TEMPERATURE.

G– TIGHTEN LOCKNUT TO PREVENT ACCIDENTAL OR UNAUTHORIZED TEMPERATURE ADJUSTMENT.

H– RE–CHECK OUTLET TEMPERATURE.

ACORN ENGINEERING COMPANY
P.O. BOX 3527 Industry, CA 91744
15125 Proctor Ave Industry, CA 91746
(626) 336–4561 FAX (626) 961–2200

TITLE		
VALVE INSTALL & MIXING VALVE ADJUSTMENT		
MANUFACTURE DATE	DATE ISSUED	DRAWING NUMBER
MARCH 2014 TO PRESENT	**03/25/14**	**9912-252-002**
	DATE REVISED	

TWO STATION WIRING DIAGRAM SHOWN

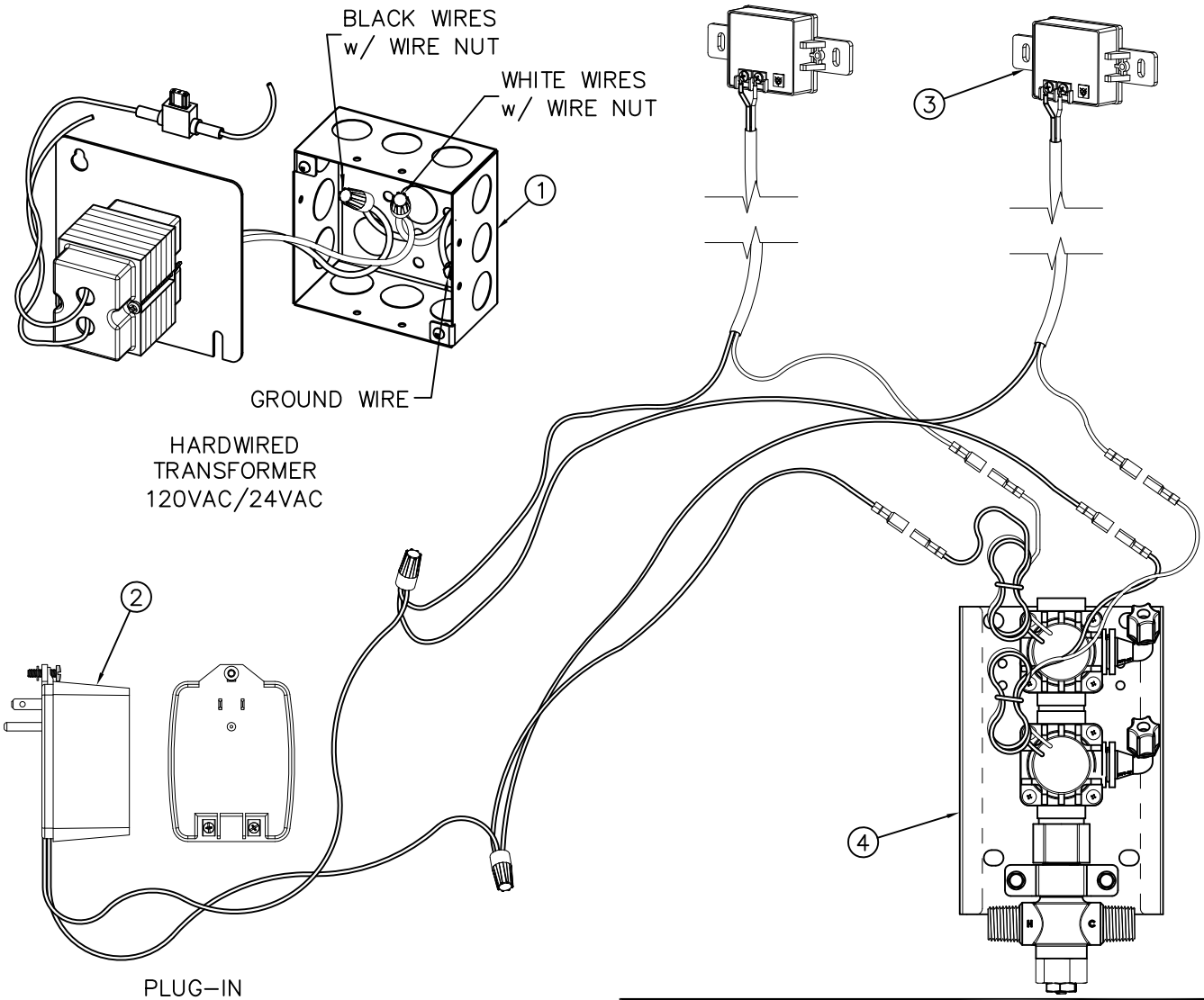

REFERENCE DRAWINGS	
24VAC SENSOR ADJUSTMENT	9940–011–001
24VAC SENSOR & HARDWARE	9955–015–002
24VAC SENSOR & MAINTENANCE	9940–010–002

INSTALLATION INSTRUCTIONS:

A– REFER TO FIXTURE DRAWINGS FOR INSTALLATION & ROUGH–IN INFORMATION.

B– PROVIDE 120VAC, 60Hz, 3 AMPS MAX, SERVICE TO CONNECT 24VAC, 50VA TRANSFORMER PLATE & J–BOX ①, OR RECEPTACLE FOR PLUG–IN TRANSFORMER ②. SEE NOTE.

C– CONNECT WIRE SET FROM SENSOR ③ TO SOLENOID VALVE ④ AND TRANSFORMER ①, OR ②. CONNECT TRANSFORMER TO POWER SUPPLY.

E– COMPLETE INSTALLATION OF FIXTURE PER FACTORY INSTALLATION SHEETS PROVIDED.

NOTE:

1– PLUG–IN TRANSFORMER INCLUDES BUILT–IN SECONDARY FUSE. IN THE EVENT OF POWER SURGE TRANSFORMER MAY REQUIRE REPLACEMENT.

2– ELECTRICAL RECEPTACLE MUST BE WIRED TO A GFI PROTECTED CIRCUIT. FIXTURE MUST BE EARTH GROUNDED PER N.E.C. (NATIONAL ELECTRICAL CODE).

ACORN ENGINEERING COMPANY
P.O. BOX 3527 Industry, CA 91744
15125 Proctor Ave Industry, CA 91746
(626) 336–4561 FAX (626) 961–2200

TITLE		
24VAC -SO SENSOR INSTALLATION INSTRUCTIONS		
MANUFACTURE DATE	DATE ISSUED	DRAWING NUMBER
OCTOBER 2010 TO PRESENT	**05/10/10**	**9912-531-003**
	DATE REVISED **03/28/14 A**	

NOTE: RANGE OF MOTION FOR ADJUSTMENT SCREW IS FROM APPROX. 8 O'CLOCK CLOCKWISE TO APPROX. 4 O'CLOCK.

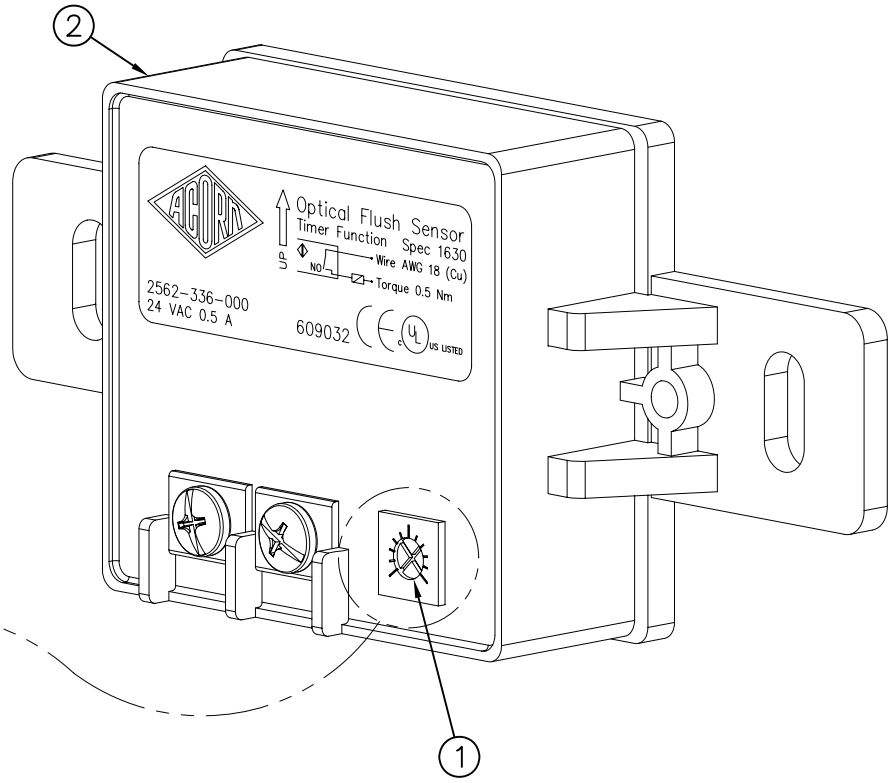

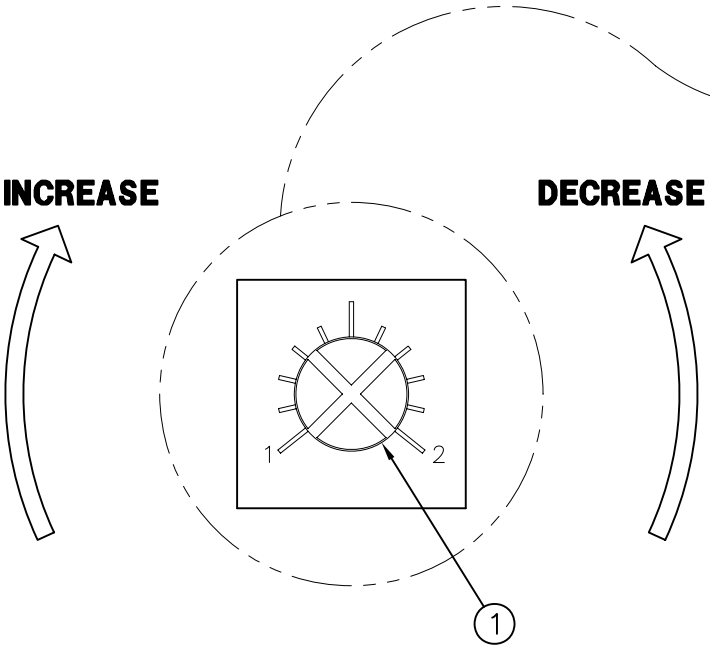

A– USE SMALL JEWELERS CROSS TIP SCREW DRIVER TO ADJUST SENSOR RANGE (1) ON BACK OF SENSOR (2).

B– TURN ADJUSTMENT SCREW (1) CLOCKWISE TO INCREASE SENSOR RANGE.

C– TURN ADJUSTMENT SCREW (1) COUNTERCLOCKWISE TO DECREASE SENSOR RANGE.

D– NOTE: SENSOR RANGE IS FROM 0 TO APPROXIMATELY 24" MAXIMUM.

ACORN ENGINEERING COMPANY
P.O. BOX 3527 INDUSTRY, CA. 91744
(626) 336-4561 FAX (626) 961-2200

TITLE		
24VAC SENSOR RANGE ADJUSTMENT		
MANUFACTURE DATE	DATE ISSUED	DRAWING NUMBER
JUNE 2002 TO PRESENT	**02/22/08**	**9940-011-001**
	DATE REVISED **08/10/09**	

START UP MODE:
The Acorn –SO is a 24VAC sensor and includes a manual range adjustment. Sensor range adjustments may be made using adjustment screw on back of sensor.

The Start Up Mode will take approximately five (5) minutes to complete its full cycle and it is important that no target is present in front of the sensor during this time. A steady red light visible in the center of the oval sensor window indicates the sensor is in Start Up Mode. If the red light is flashing, this indicates that the sensor is picking up a target. Unless this target is a permanent fixture in the sensor's environment (i.e. a wall or stall door) it must be removed from the view of the sensor. If this target is permanent the sensor will attempt to adapt itself around this target. When Start Up Mode is complete the steady red light will go off.

NOTE:
1. If the 24VAC power supply is interrupted for more than fifteen (15) seconds the Start Up Mode will automatically repeat itself when the power is restored.
2. If the indicator light flashes three (3) times quickly, then three (3) times slowly and continues to repeat this sequence, this indicates incorrect wiring or a short in the 24VAC power supply.

NORMAL VALVE FUNCTION:
One second time delay when sensor is activated by user. Time of flow is 30 seconds. To reactivate, the user must move out of and return to the sensing area. When installed in the shower, flow continues indefinitely until user moves from sensing area.

CONDITION:	***PROBABLE CAUSE***
NO WATER FLOW: 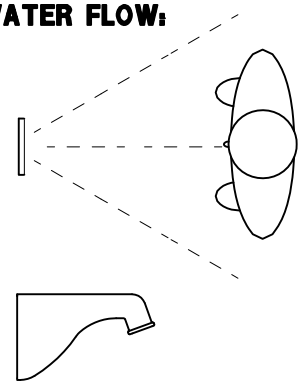	1.1 Stops or main water supply may be closed. 1.2 When using –T/P mixing valve, both supplies must be open to supply adequate water flow. 1.3 Clogged strainer. 1.4 Clogged water diaphragm. 1.5 Loose wiring connections. 1.6 Blown fuse at transformer. 1.7 Circuit breaker shut off.
WATER WON'T SHUT OFF 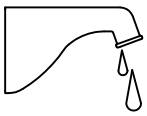	2.1 Adjacent objects may be triggering the sensor. 2.2 Sensor malfunction.
WATER DRIPS 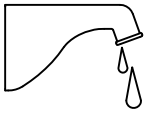	3.1 Clogged water diaphragm.

MINIMUM / MAXIMUM WATER PRESSURE (PSI) 30 / 125. MAXIMUM WATER TEMPERATURE 130°F.
Refer to drawing #9955–016–002 for parts breakdown of items listed above.
Refer to Acorn Operations And Maintenance Manual for installation instructions and repair parts.

ACORN ENGINEERING COMPANY
P.O. BOX 3527 Industry, CA 91744
15125 Proctor Ave Industry, CA 91746
(626) 336–4561 FAX (626) 961–2200

TITLE		
24VAC -SO SENSOR OPERATED VALVE MAINTENANCE INSTRUCTIONS		
MANUFACTURE DATE **FEBRUARY 2012 TO PRESENT**	DATE ISSUED **02/09/12** DATE REVISED	DRAWING NUMBER **9940-010-003**

TWO STATION WIRING DIAGRAM SHOWN

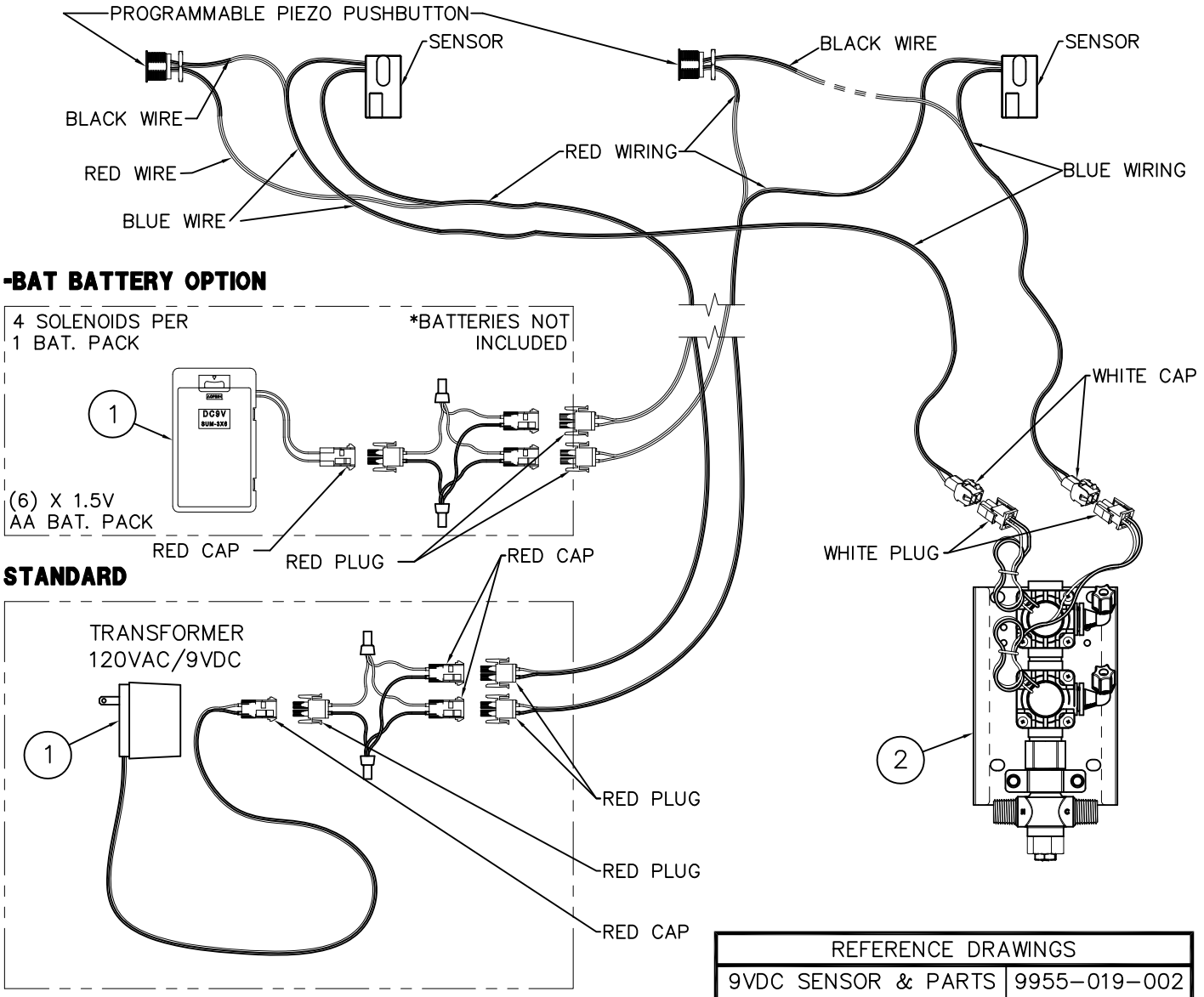

REFERENCE DRAWINGS	
9VDC SENSOR & PARTS	9955–019–002
PIEZO PB PROGRAMMING	9940–009–001

INSTALLATION INSTRUCTIONS:

A– USING APPROPRIATE INSTALLATION INSTRUCTIONS, MOUNT FIXTURE TO WALL AND MAKE–UP WASTE PIPING CONNECTIONS. SENSOR OR ELECTRONIC PUSHBUTTON ARE FACTORY INSTALLED. POWER SUPPLY ① AND VALVE ② SHIPPED LOOSE.

B– INSTALL SOLENOID VALVE ASSEMBLY ② ON THE WALL (FASTENERS AND WALL ANCHORS BY OTHERS), MAKING SURE THAT THE VALVE WILL BE WITHIN BOTTOM ENCLOSURE.

C– CONNECT WATER SUPPLY (AFTER FLUSHING LINES) TO VALVE, AND VALVE RISER TO SPOUTS AS PER UNIT INSTALLATION INSTRUCTIONS.

D– CONNECT SOLENOID VALVE, POWER SUPPLY AND SENSOR WIRING AS SHOWN ON DETAIL.

E– COMPLETE THE INSTALLATION OF THE UNIT ACCORDING TO THE UNITS INSTALLATION INSTRUCTIONS.

NOTE:

1– PLUG–IN TRANSFORMER INCLUDES BUILT–IN SECONDARY FUSE. IN THE EVENT OF POWER SURGE TRANSFORMER MAY REQUIRE REPLACEMENT.

2– ELECTRICAL RECEPTACLE MUST BE WIRED TO A GFI PROTECTED CIRCUIT. FIXTURE MUST BE EARTH GROUNDED PER N.E.C. (NATIONAL ELECTRICAL CODE).

ACORN ENGINEERING COMPANY
P.O. BOX 3527 Industry, CA 91744
15125 Proctor Ave Industry, CA 91746
(626) 336–4561 FAX (626) 961–2200

TITLE		
-SO SENSOR/ -PPZ PIEZO ELECTRONIC PUSHBUTTON INSTALLATION		
MANUFACTURE DATE	DATE ISSUED	DRAWING NUMBER
OCTOBER 2009 TO PRESENT	09/06/13	9927-221-005
	DATE REVISED 03/25/14	

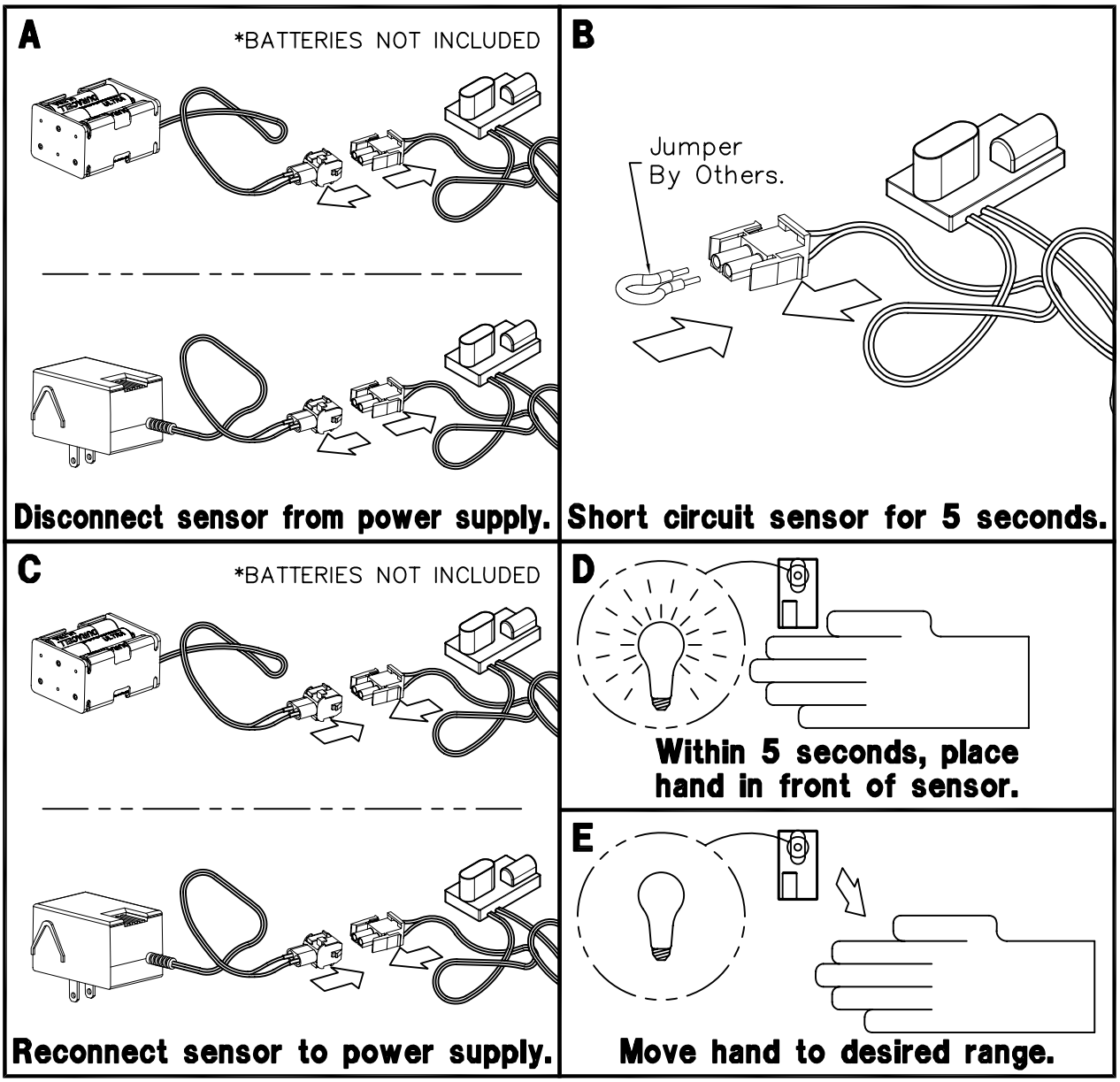

NOTE: THESE INSTRUCTIONS ONLY APPLY TO 9 VOLT SENSORS THAT DO NOT HAVE A RANGE ADJUSTMENT SCREW ON THE BACK. SEE DRAWING # 9927–222–001.

INSTRUCTIONS:

A– Disconnect sensor from power supply.

B– Create a short circuit between the positive and negative connections on the sensor for five seconds. **WARNING:** Do not create a short circuit on the power supply or while the sensor is connected to the power supply.

C– Reconnect the sensor to the power supply.

D– Within 5 seconds of making the connection, place hand 2 to 4 inches from the sensor.

E– Once red light begins flashing quickly, move hand to preferred distance and wait for light to stop flashing.

F– Check distance. If unsatisfactory, repeat steps A through E.

ACORN ENGINEERING COMPANY
P.O. BOX 3527 INDUSTRY, CA. 91744
(626) 336–4561 FAX (626) 961–2200

TITLE		
9 VOLT DC SENSOR RANGE ADJUSTMENT		
MANUFACTURE DATE	DATE ISSUED	DRAWING NUMBER
SEPTEMBER, 2001 TO PRESENT	**09/06/01**	**9927-222-002**
	DATE REVISED **09/30/11**	

Programable Piezo Pushbutton Programming Instructions (Flow Time Adjustment)

The Button is factory set an 8 sec. timing cycle, if an 8 sec. cycle is adequate, then **no** programming adjustment is required.

NOTE: Read the entire document before trying to program the piezo pushbutton.

THE TIME SETTINGS PROGRAM USES 3 DIFFERENT TIMING MODES:

- **1 second timing mode:** Each push of the button adds 1 second to the total timing cycle.
- **5 second timing mode:** Each push of the button adds 5 seconds to the total timing cycle.
- **20 second timing mode:** Each push of the button adds 20 seconds to the total timing cycle.

To program the piezo pushbutton, you will need to be able to see the back of the piezo pushbutton.

Prevision must be made to access the back of the piezo pushbutton. There is an LED on the back of the piezo pushbutton under a layer of transparent epoxy, used as a programming indicator light.

NOTE: This programming procedure moves along rapidly, there is only about 2 or 3 seconds between programming operations.

In order to start the programming the piezo pushbutton, the button must be powered down. Disconnect the red power cable and wait 20 seconds, then reconnect the red power cable.

As soon as the cable is reconnected the LED will start flashing, it will flash 4 times, then stays on for 3 seconds. During the 3 second period, push the piezo button once, the LED will go out, now you are in the **1 sec timing mode** and each time the button is pushed the LED will flash, adding 1 sec to the total timing cycle.

To move on to the **5 sec timing mode**, pause and wait for the LED to flash 2 times, now you are in the 5 sec timing mode. Each time the button is pushed the LED will flash, adding 5 sec to the total timing cycle.

To move on to the **20 sec timing mode**, pause and wait for the LED to flash 3 times, now you are in the 20 sec timing mode and each time the button is pushed the LED will flash, adding 20 sec to the total timing cycle. After programing is complete, pause and wait for the LED to flash 4 times and then 5 times, which completes the programming.

- When a **timing mode is not required** then **do not** push the button and wait for the next timing mode.
- Each timing mode (1 sec, 5 sec or 20 sec timing mode) can be sequenced up to 100 times, that is the number of times, the button can be pushed, to increase the total timing cycle in each timing mode.

ACORN ENGINEERING FIELD SERVICE
TOLL FREE 800-743-8259 • **LOCAL** 626-855-4866 • **FAX** 626-855-4863

Please visit ***www.acorneng.com*** for most current specifications.

Programmable Piezo Pushbutton Programming Instructions (Flow Time Adjustment)

WORKSHEET
(FILL IN ALL BOXES, WHICH WILL SIMPLIFY THE PROGRAMMING PROCEDURE)

Fill in all the Boxes below

Determine the number of seconds per timing cycle

PROGRAMING STEPS:

- Power down piezo button for 10 seconds.
- Reconnect power.
- LED flashes, then stay on.
- While the LED is steady on, push button.
- LED turns off.

1 Push = 1 Second

x 1 = sec

- You are in the 1 sec timing mode, immediately push the button, 1 push equals 1 sec added to the total timing cycle.
- Pause and wait for the LED to flash 2 times.

ADD

1 Push = 5 Seconds

x 5 = sec

- You are in the 5 sec timing mode, immediately push the button, 1 push equals 5 sec added to the total timing cycle.
- Pause and wait for the LED to flash 3 times.

ADD

1 Push = 20 Seconds

x 20 = sec

- You are in the 20 sec timing mode, immediately push the button, 1 push equals 20 sec added to the total timing cycle.

EQUALS

Total timing cycle equals

seconds

ACORN ENGINEERING COMPANY

ACORN ENGINEERING FIELD SERVICE
TOLL FREE 800-743-8259 • **LOCAL** 626-855-4866 • **FAX** 626-855-4863

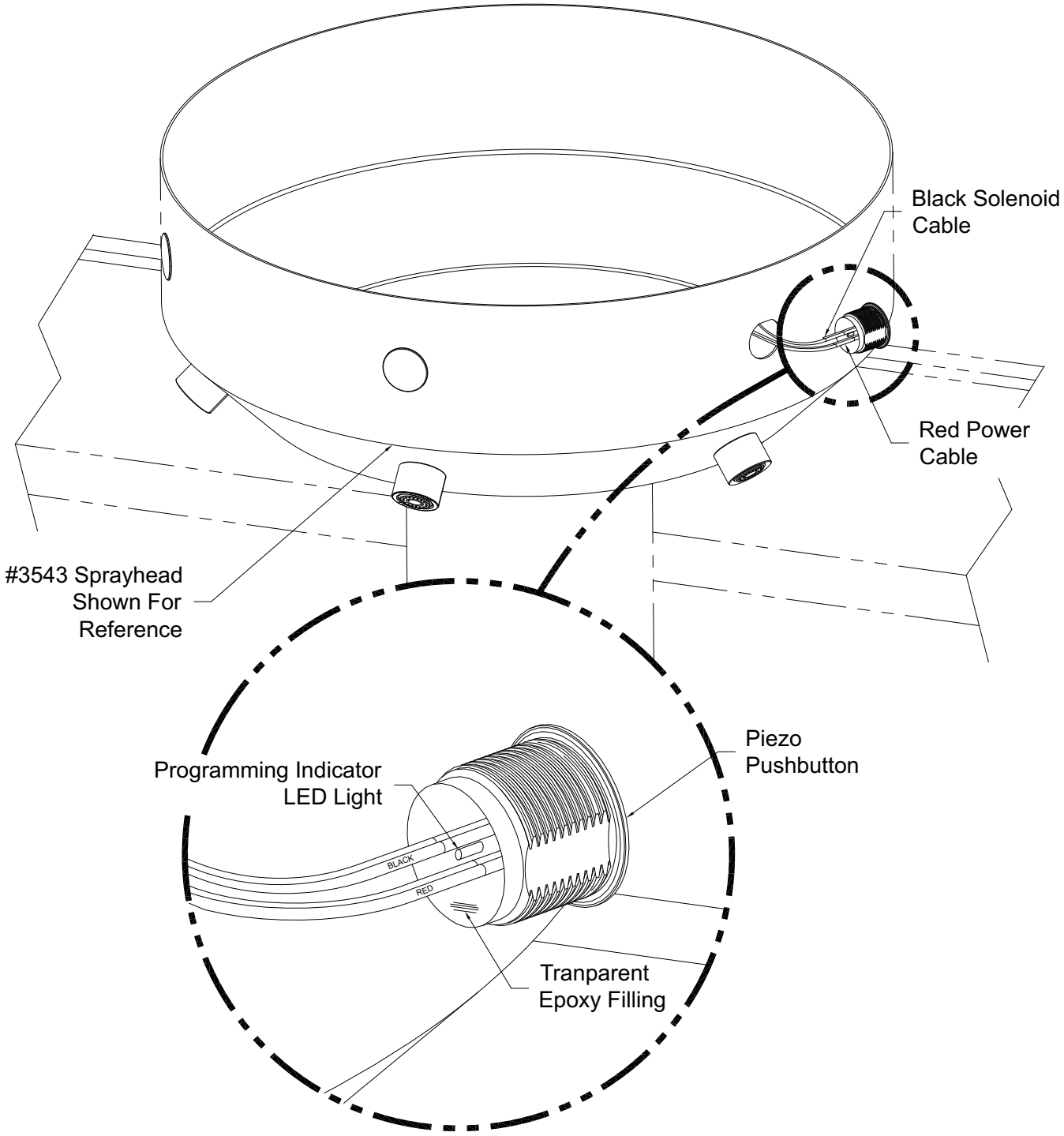
Black Solenoid Cable
Red Power Cable
#3543 Sprayhead Shown For Reference
Piezo Pushbutton
Programming Indicator LED Light
BLACK
RED
Tranparent Epoxy Filling