murdock® SINCE 1853

# DRINKING FOUNTAIN
## INSTALLATION/MAINTENANCE INSTRUCTIONS

# A171400S-VR-WS & A171400S-VR-WS-BF11S/12S

**(Formerly MA171-A008 Series)**
**Barrier Free, Wall Mounted Drinking Fountain**
**With or Without Bottle Filler**



**A171400S-VR-WS-BF11S**
(Shown)

**NOTES TO INSTALLER:**

1. **Please leave this documentation with the owner of the fixture when finished.**
2. **Please read this entire booklet before beginning the installation.**
3. **Check your installation for compliance with plumbing, electrical and other applicable codes.**
4. **IMPORTANT: Water supply to unit from RO Reverse Osmosis filtration systems will damage fixture components and void product Warranty.**

## IMPORTANT

**OPTIONAL BOTTLE FILLER INSTALLATION DETAILS (MODEL # BF11S, BF12S):**

This series is offered with optional Bottle Filler unit (packaged / shipped separately) which requires Wall mounting. Rough-In and Installation details for Bottle Fillers are shipped with the Bottle Filler specified.
For Installation details refer to the specified Bottle Filler Product Page Downloads using the following link:
**www.murdockmfg.com/bottle-fillers**

## TECHNICAL ASSISTANCE TOLL FREE TELEPHONE NUMBER:
## (800) 743-8259

**Technical Assistance Email: Fieldservice@acorneng.com**

**For current Warranty click hyperlink Product Warranty or visit: www.murdockmfg.com/terms-and-warranty**

*Murdock assumes no responsibility for use of void or suspended data. © Copyright Murdock, City of Industry, CA Member of Morris Group International. Please visit **www.murdockmfg.com** for most current specifications.*

COMPLIES WITH STANDARDS

NSF/ANSI 61

Federal Public Law 111-380 (No Lead)

**MURDOCK**
15125 Proctor Ave.
City of Industry, CA
91746 U.S.A.
Phone 800-591-9360
626-336-4561
www.murdockmfg.com

Member of MORRIS GROUP INTERNATIONAL

7021-061-001 New: 11/05/2026

NOTE: Units are intended to replace existing drinking fountain mounting points, water supply and waste outlet rough-ins with minimal alteration to site conditions. However, not all replacement fixtures will match existing mounting and rough-ins without installer performing alterations to wall and possibly to drinking fountain back plate.

IMPORTANT: Accessibility compliance and drinking bubbler discharge height are subject to existing site conditions and may not conform to local code authority requirements. Murdock Manufacturing assumes no responsibility assumes no responsibility.

## ROUGHING-IN AND DIMENSIONAL DRAWING

Prior to roughing consult with local, state, and federal codes for proper mounting height.

### A171400S-WS WALL MOUNTED DRINKING FOUNTAIN

A. 6" x 6" SUPPLY CUTOUT
B. WASTE OUTLET FOR 1-1/4" P-TRAP BY OTHERS
C. HANGER BRACKET
D. Ø1/4" PUNCHING, 2 PLACES FOR ANCHORING HARDWARE BY OTHERS

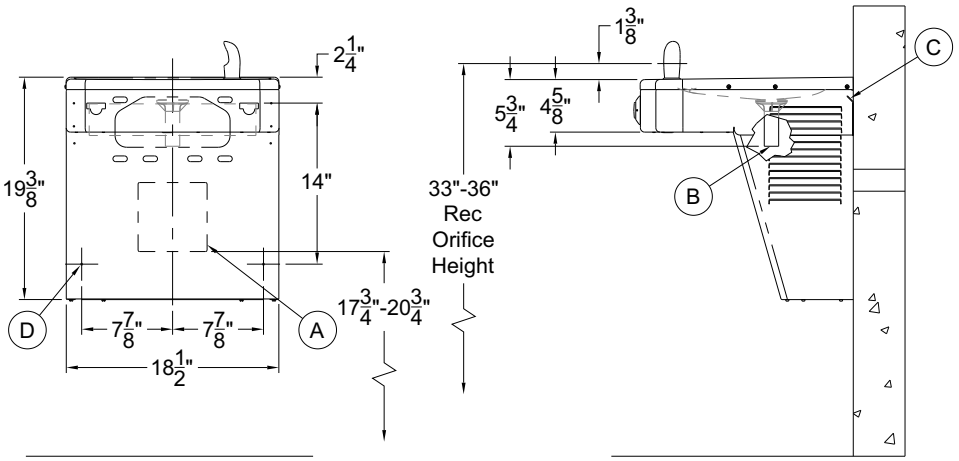


GENERAL NOTES:
1. ALL DIMENSIONS ARE IN INCHES [MM]
2. STOP VALVE AND TRAP ARE PROVIDED BY INSTALLER
3. IMPORTANT: UNITS MUST BE ATTACHED TO WALL WITH ANCHOR SCREWS

**Installation Instructions for BF11S/12S, see 7021-047-001.**

# DRINKING FOUNTAIN
## INSTALLATION/MAINTENANCE INSTRUCTIONS

**PRIOR TO INSTALLATION:**

Important: some options may slightly alter installation. To ensure proper installation review the manual thoroughly and verify Rough-Ins before beginning work. File this manual with the owner or maintenance personnel upon completion of installation.

- Fixture mounting requirements: industry standard wall construction, adequate to support the fixture and installer provided wall anchors sufficient to secure the fixture.
- Inspect fixture and all parts for damages.

**IMPORTANT:**

1. Waste P-Trap, Water Supply Service Angle Stop Valve and 2" x 4" Electrical Plug-In Receptacle to be supplied by others in accordance with local codes. A P-Trap (by others) must be used for the Waste Connection.
2. Water supply is 3/8" Outside Diameter Copper Tube. Waste is 1-1/4" Outside Diameter.
3. Completely flush supply lines of all foreign debris before connecting to fixture. Drinking Fountain designed to not affect taste, odor, color, or sediment. Optional water filter (WF1) is available should any of these problems arise from the water supply.
4. If possible, limit exposure of the Drinking Fountain to direct sun light. The actual surface temperature of a Drinking Fountain in direct sunlight on a 90°F day, the Drinking Fountain would be about 140°F.
5. Do NOT solder Copper Tube when inserted into the Coupler as damage to the O-Ring will result.
6. All burrs must be removed from outside of cut Tubes before inserting into Coupler or other components.
7. **Warranty is voided** if installation is not made following current Murdock Mfg. installation instructions and if components are assembled to the fixture that is not approved by Murdock Mfg.
8. Fixture operates within water pressure range of 20 to 105 PSIG (138 to 724 kPa). Murdock Mfg. will not warranty fixtures damaged when connected to supply lines with flow pressure lower than 20 PSIG (138 kPa) or higher than 105 PSIG (724 kPa). A pressure regulator must be furnished by others on supply line if inlet pressure is greater than 105 PSIG (724 kPa).
9. **Per UPC 609.10**- *All building water supply systems in which quick acting valves are installed shall be provided with devices to absorb the Hammer caused by high pressure resulting from the quick closing of the valve. These pressure-absorbing devices shall be approved mechanical devices. Water pressure-absorbing devices will be installed as close as possible to the Quick Closing Valve.*

**INSTALLATION:**

1. Mount Hanger Bracket to wall horizontally level as shown in Roughing-In and Dimensional Drawing. **NOTE:** Adjust height of Bracket if Bubbler outlet height is required to vary from that shown /indicated. Hanger Bracket **MUST** be securely anchored to wall with fasteners sufficient to support 3 times the weight of Water Cooler.
2. Remove the bottom cover from the drinking fountain and set aside in a safe place. Save the screws in a secure location for re-use in later stages of installation.
3. Hang the Drinking Fountain on the Hanger Bracket, ensuring the Bracket Tabs engage AND seat in the slots in the back of the drinking fountain. Verify Drinking Fountain is level, left to right AND front to back from bottom of unit.
   **NOTE:** The Bubbler Stream may be adversely affected if unit is not square and level. Bottom of unit and louvers should be used as reference to verify unit is square and plumb.
4. Anchor Drinking Fountain to wall at other mounting points in base. Shim lower rear mounting points to level unit if necessary.
5. Thoroughly flush the 3/8" O.D. Supply Line and then connect drinking fountain to water supply Angle Stop Valve (by others) with supplied 3/8" O.D. copper tube.
6. Make up 1-1/4" O.D. P-Trap Waste Connection.

**NOTE:** Site conditions may require modification of the back panel to remove unnecessary metal if needed to clear existing waste piping. Removal of unnecessary metal will not void the warranty, however, installer must keep the left and right mounting bracket areas in tact, noted as "C" on page 3 of this manual.

**START UP:**

1. Before assembling bottom cover to the drinking fountain, but after thoroughly flushing the supply line and connecting it to the fixture, turn on building water supply and check all connections for leak.
2. Air within the drinking fountain system or the structure supply piping will cause an irregular bubbler outlet stream until purged out by incoming water. Covering the bubbler with a clean cup (or similar object) is recommended when first activating drinking fountain to prevent excessive splashing. Depress the pushbutton until steady water stream is achieved.
3. If water flow requires adjustment, insert a slotted narrow blade screwdriver through the hole centered on the pushbutton to the flow regulator. Turning clockwise will increase flow and turning counterclockwise will decrease flow.
4. Recheck all water and drain connections with water flowing through system.
5. Assemble bottom cover to drinking fountain with screws furnished.

**TROUBLE SHOOTING:**

**IMPORTANT: BEFORE MAKING ANY OF THE REPAIRS LISTED, MAKE SURE THE DRINKING FOUNTAIN WATER SUPPLY VALVE IS SHUT OFF.**

1. Adjustments:
   a. Cartridge – The water flow can be adjusted using a slotted narrow blade screwdriver and turning clockwise to increase flow and counterclockwise to decrease flow.
   b. Bubbler Stream – Bubbler can be rotated slightly to direct the stream backwards or forwards. Adjust the stream to minimize splashing. Splashing may occur from bubbler stream if the unit is not level. Shim lower mounting points, if necessary, to level fountain.

2 Restricted Or No Water Flow
   a. Ensure water supply service stop valve is fully open.
   b. Verify minimum 20 psig supply line flow pressure.
   c. Check for twists or kinks in bubbler tubing.
   d. Check the water inlet strainer. Sediment from the main supply can get trapped in the screen along with installation materials such as pipe dope and flux. The screen should be cleaned and checked on a regular basis and replace if needed.
   **NOTE: STRAINER SCREEN MUST BE IN PLACE FOR WATER TO FLOW.**
   e. The cartridge valve located in the water control assembly or bubbler can also become clogged with foreign material. The cartridge valve can only be replaced and not repaired.
   f. Check flow adjustment. See start up note #3.

**CLEANING & MAINTENANCE GUIDE:**

1. Periodically remove access panels and clean out in-line strainer.
2. Do NOT use harsh chemicals, abrasive or petroleum based cleaners. Use of these will void the Acorn warranty.
3. Exterior panels can be cleaned using mild household detergents or warm, soapy water. Extra care must be used cleaning chrome plated items and mirror finished stainless steel. They can scratch easily and should only be cleaned using a clean, soft cloth and mild soap with water or a mild glass cleaner.

## OUTDOOR INSTALLATION INSTRUCTIONS - A171-WS ONLY:

**IMPORTANT: Only A171-WS Series, BF11S, BF12S Stn Stl Bottle Fillers are rated for outdoors.**

- Units installed outdoors presume average conditions and require adequate protection to prevent exposure to extreme hot or cold temperatures which will affect Warranty.
- Best practices include installation beneath an overhang and avoiding direct sunlight.
- Continual ambient temperatures exceeding 80°F (26.67°C) may cause compressor to wear prematurely.
- Units are not freeze resistant.
- Caulk all around the basin where it contacts the wall and where apron contacts the wall as shown, to reduce the possibility of rain water from leaking into the cabinet. **DO NOT CAULK THE REMOVABLE LOWER ACCESS COVER.**

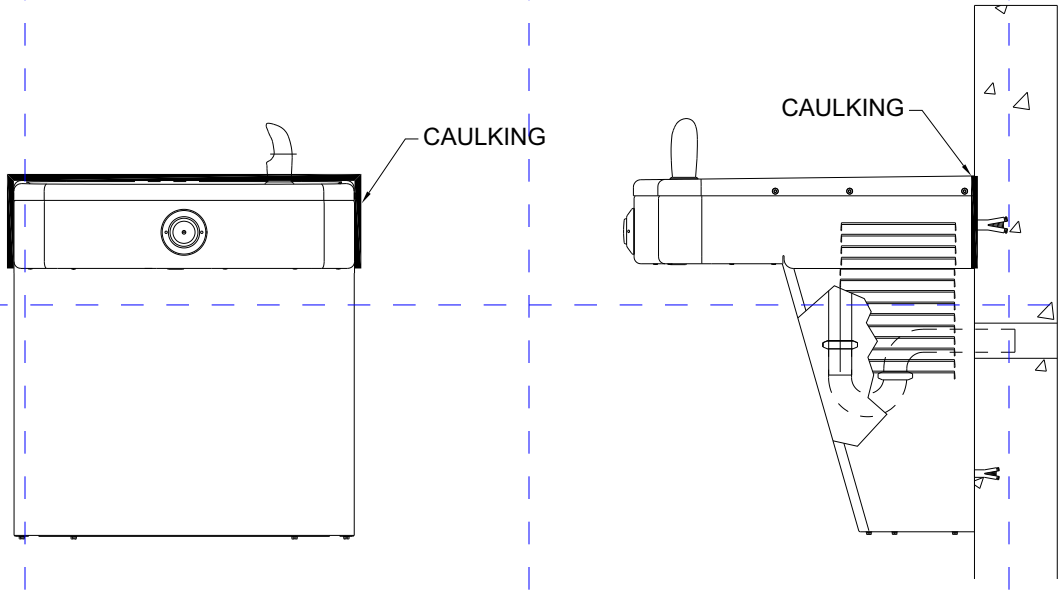


## A171400S-WS UNIT PIPING INSTALLATION (WITH -BF OPTIONS)

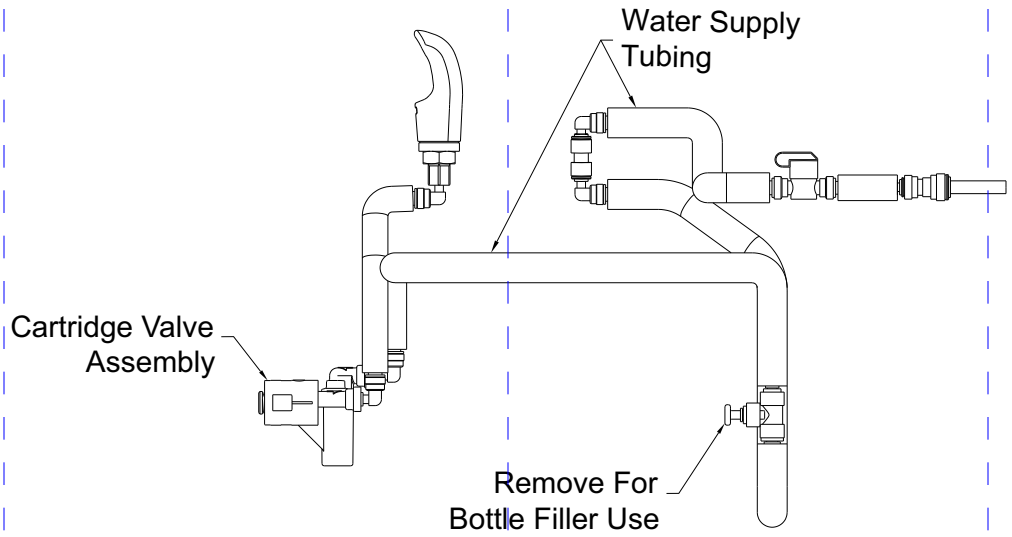

## PUSH-IN FITTING INSTALLATION

NOTE: FITTINGS AND TUBE SHOULD BE KEPT CLEAN, BAGGED AND UNDAMAGED PRIOR TO INSTALLATION.

**TO CUT TUBE:**

Cut to fit length of 1/4" PE tubing and remove any burrs or sharp edges. Ensure that the outside diameter is free from score marks. Tube ends should be square.

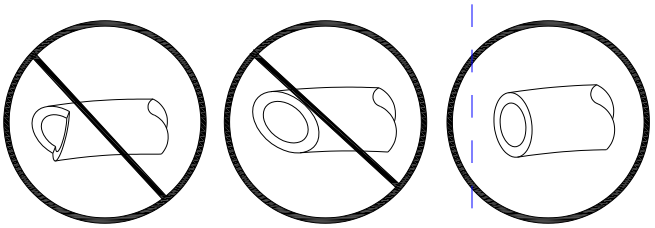

**INSERTING THE TUBE:**

1. Firmly and fully insert the tubing end into the push-in fitting up to the tube stop located approximately ½" deep.

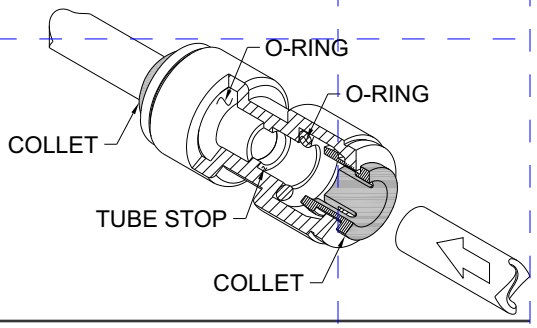


2. Pull on the fitted tubing to ensure it is secure. Tube should not come free from the fitting. Water test the connection assembly prior to leaving the site to ensure there are no leaks.

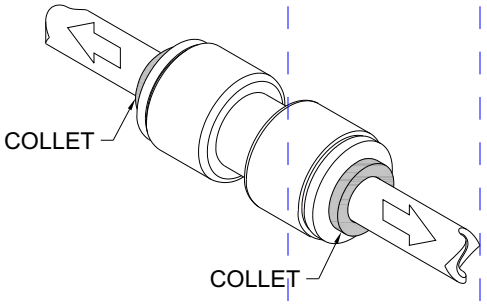


**DISCONNECTING THE TUBE:**

To disconnect the tube from the fitting ensure that the water line is depressurized. Push collet square towards the push-in fitting body and hold. While holding the collet in, pull on the PE tubing to remove from the push-in fitting.

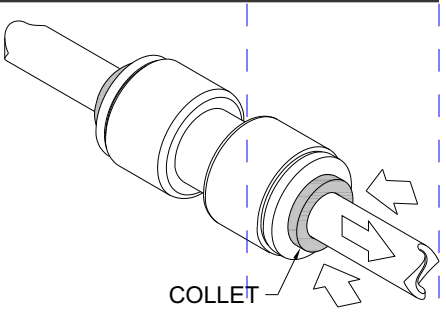

## A171400S-WS VANDAL RESISTANT CARTRIDGE REPLACEMENT/ STRAINER MAINTENANCE

Note: Use the **-VR** maintenance tool to perform the following:

1. Strainer plug (4) must be removed before cartridge replacement and strainer maintenance (no need to turn the water off at the angle stop). Some residual water will drain during plug removal.
2. Clean strainer (4) as needed using clean water.
3. Cartridge replacement - Rotate and remove **-VR** pushbutton escutcheon (6) to release pushbutton (7) and springs (8) (9) to access cartridge.
4. Remove cartridge retaining nut (10) . Remove and replace cartridge (2). When replacing cartridge be sure to align the inlet and outlet ports on the cartridge with the ports in the valve body.
5. Install item (10) using maintenance tool (5) (Be careful not to over tighten)
6. Install button assembly items (6) (7) (8) (9) using maintenance tool (5). Insure springs are installed in button correctly.
7. Reinstall strainer (4) and plug (3) using maintenance tool (5).

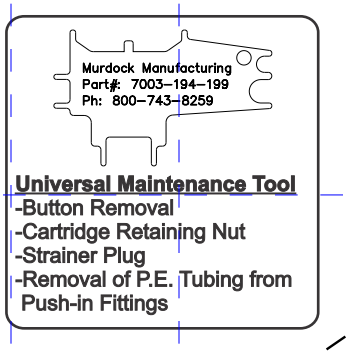


**Universal Maintenance Tool**
-Button Removal
-Cartridge Retaining Nut
-Strainer Plug
-Removal of P.E. Tubing from Push-in Fittings

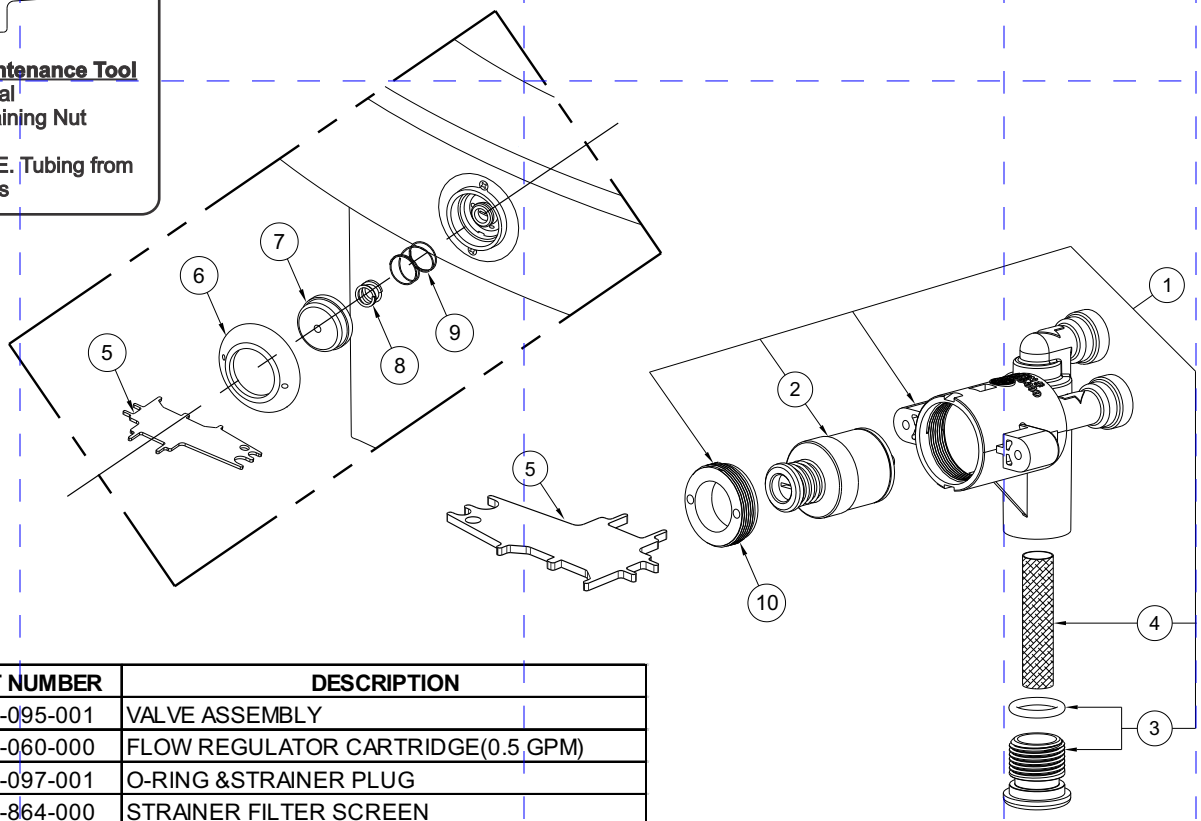


| ITEM | PART NUMBER | DESCRIPTION |
|---|---|---|
| 1 | 7003-095-001 | VALVE ASSEMBLY |
| 2 | 7000-060-000 | FLOW REGULATOR CARTRIDGE(0.5 GPM) |
| 3 | 7003-097-001 | O-RING &STRAINER PLUG |
| 4 | 7003-864-000 | STRAINER FILTER SCREEN |
| 5 | 7003-194-199 | (-VR) MAINTENANCE TOOL |
| 6 | 7003-197-199 | (-VR) PUSHBUTTON ESCUTCHEON, CHROME |
| 7 | 7003-196-199 | (-VR) PUSHBUTTON, CHROME |
| 8 | 7003-195-000 | (-VR) PUSHBUTTON OVERTRAVEL SPRING |
| 9 | 7003-193-000 | (-VR) PUSHBUTTON RETURN SPRING |
| 10 | 7000-052-000 | RETAINING NUT |

**NOTE: STRAINER FILTER SCREEN MUST BE IN PLACE FOR WATER TO FLOW.**

# OPTIONAL WATER FILTER INSTALLATION:

**NOTE:**
**A171 & A172 Series models are offered with Optional Easy Door® Filter Models WF3EZ, WF5EZ, WF12EZ**

For optional filter refer to Easy Door® filter installation instruction provided with the filter unit. Filter and Door are shipped separately.

## INSTALLATION DETAIL LINK



**Easy Door Filter Detail**

**IMPORTANT:**
FLUSH 6 GALLONS OF WATER THROUGH THE FILTER BEFORE INITIAL USE!
- Bubbler run time for approximately 12 minutes
- Bottle Filler run time for approximately 6 minutes

## A1714000S-WS DRINKING FOUNTAIN PARTS BREAKDOWN

**NOTE:** See page #10 for fixture drawing corresponding to table of parts below.

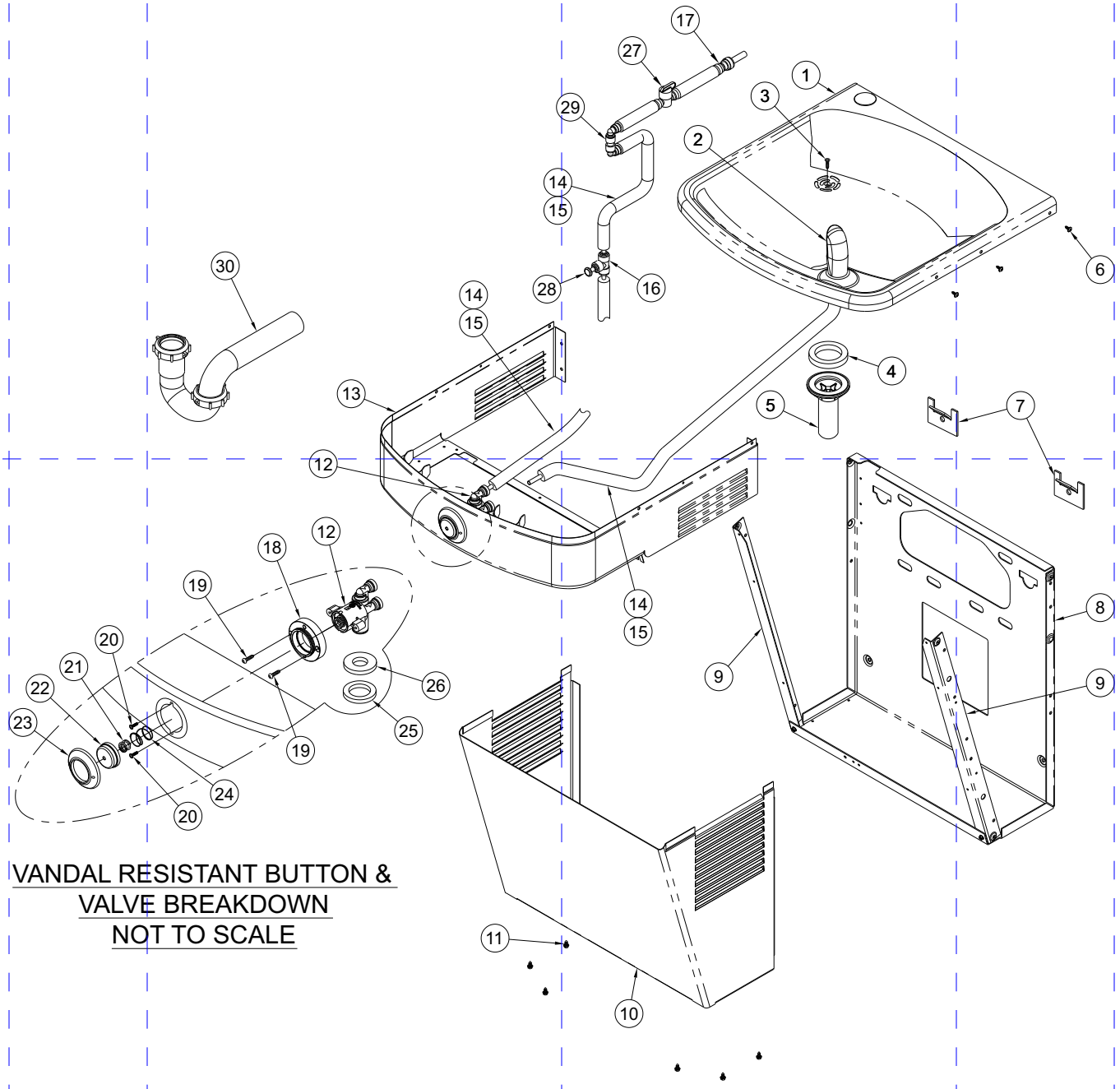


VANDAL RESISTANT BUTTON &
VALVE BREAKDOWN
NOT TO SCALE

## A1714000S-WS DRINKING FOUNTAIN PARTS BREAKDOWN TABLE

**NOTE:** See previous page (9) for fixture drawing corresponding to table of parts below.

| ITEM # | PART NUMBER | DESCRIPTION |
|---|---|---|
| 1 | 7003-161-299 | BASIN TOP w/ HOLE FOR BF11/BF12 |
| 2 | 7000-012-001 | STAINLESS STEEL BUBBLER ASSEMBLY |
| 3 | 0124-008-000 | #8 x 3/4" LG FLAT HD SELF TAPPING SCREW |
| 4 | 7000-006-000 | FLAT DRAIN GASKET |
| 5 | MURER006-199 | DRAIN ADAPTER |
| 6 | 0124-056-000 | #8 x 3/8" LONG PHIL HEAD SHEET METAL SCREW |
| 7 | MURER016-199 | HANGER BRACKET |
| 8 | MURER017-199 | BACK PANEL |
| 9 | 7003-007-199 | SUPPORT STRUT |
| 10 | 7003-035-299 | COVER - STAINLESS STEEL |
| 11 | 0124-031-000 | #8 x 3/8" LONG SLOTTED HEX WASHER HD SCREW |
| 12 | 7003-095-001 | VALVE ASSEMBLY |
| 13 | 7003-211-004 | APRON ASSEMBLY - STAINLESS STEEL |
| 14 | 7022-055-000 | FOAM PIPE INSULATION |
| 15 | 2169-000-000 | 1/*4" O.D. PE TUBING (BLUE) |
| 16 | 1895-710-000 | 1/4" O.D. TUBE UNION TEE (PUSH-IN) CONNECTION |
| 17 | 1895-123-000 | 1/4" x 3/8" O.D. PUSH-IN CONNECTION |
| 18 | 7003-198-199 | (-VR) PUSHBUTTON MOUNTING SLEEVE |
| 19 | 0124-055-000 | #8 x 3/4" PHILLIPS ROUND HEAD SCREW |
| 20 | 0161-062-000 | #6-32 x 1/2" S/S PHIL FLAT HEAD SCREW |
| 21 | 7003-195-000 | OVERTRAVEL SPRING |
| 22 | 7003-196-199 | (-VR) CHROME PLATED PUSHBUTTON |
| 23 | 7003-197-199 | (-VR) CHROME PLATED ESCUTCHEON |
| 24 | 7003-193-000 | PUSHBUTTON RETURN SPRING |
| 25 | 7003-200-000 | LOWER GASKET |
| 26 | 7003-199-000 | UPPER GASKET |
| 27 | 7000-420-000 | 1/4" SHUTOFF VALVE |
| 28 | 1895-715-000 | 1/4" ACETAL PLUG |
| 29 | 1895-121-000 | 1/4" OD UNION PUSH-IN CONNECTION |
| 30 | 4970-267-000 | 1-1/4" P-TRAP |

Repairs must be made with Murdock Manufacturing parts only. Please order through your local representative or distributor. The phone number to locate your local representative is 1.800.591.9360.