SMITH® JAY R. SMITH MFG. CO.®
MEMBER OF MORRIS GROUP INTERNATIONAL
POST OFFICE BOX 3237
MONTGOMERY, ALABAMA 36109-0237 (USA)
TEL: 334-277-8520 FAX: 888-377-7818 www.jrsmith.com
CUSTOMER DRIVEN SINCE 1926
MEMBER OF:

LOCATION

"T" HANDLES FOR PLUG CLOSURES

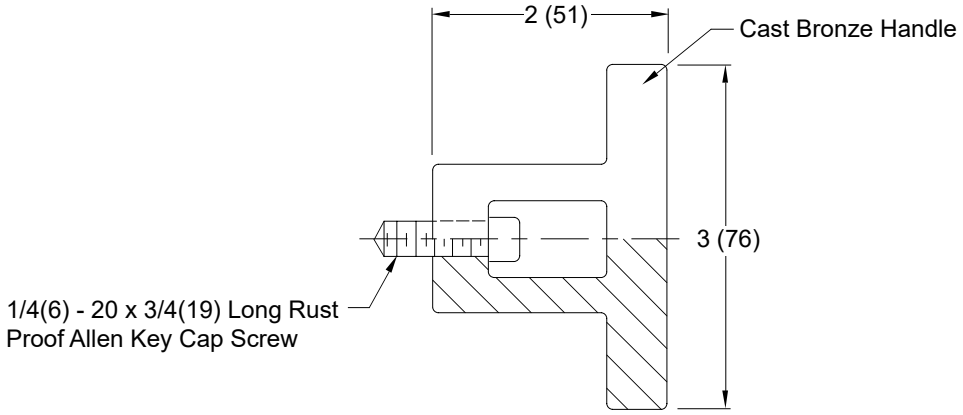

Fig. 4499 "T" Handle Adaptor Assembly

TYPICAL INSTALLATION IN SMITH COUNTERSUNK PLUGS

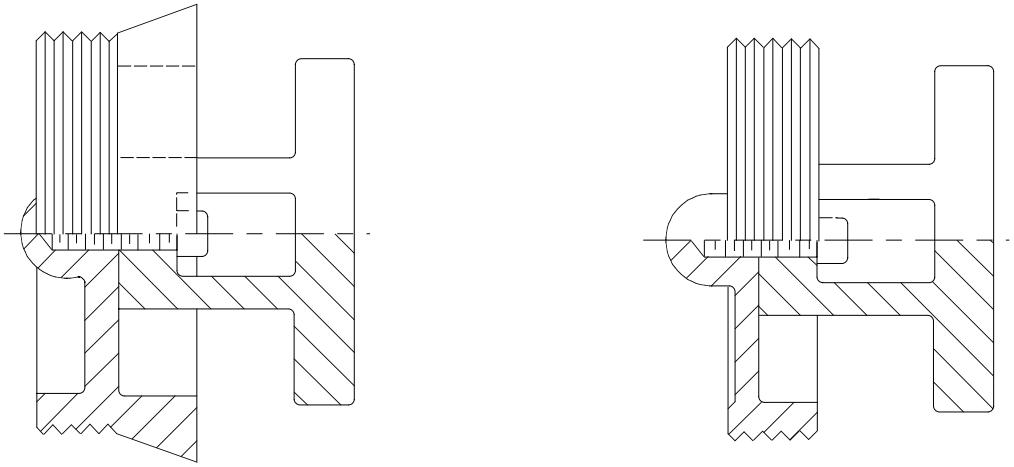

LEAD SEAL PLUG

TAPER THREAD PLUG

NOTE: Dimensions shown in parentheses are in millimeters.

REV.	DATE	DESCRIPTION	BY	CKD. BY
B	8-18-23	Removed Function	HS	CL
A	1-12-96	Submittal Update	EMB	BS

WEIGHT POUNDS

VOLUME CUBIC FEET

FIGURE NUMBER **4499**

B

DRAWING NUMBER S4499

SIZE A

SCALE: NONE

DATE: 4-8-63

APPROVED BY: JMS

CHECKED BY: JMS

DRAWN BY: SL

4499

FIGURE NUMBER

DIMENSIONS ARE SUBJECT TO MANUFACTURERS TOLERANCE AND CHANGE WITHOUT NOTICE

WE CAN ASSUME NO RESPONSIBILITY FOR USE OF SUPERSEDED OR VOID DATA

WARNING: Cancer and Reproductive Harm - www.P65Warnings.ca.gov