SMITH® JAY R. SMITH MFG. CO.®
MEMBER OF MORRIS GROUP INTERNATIONAL
POST OFFICE BOX 3237
MONTGOMERY, ALABAMA 36109-0237 (USA)
TEL: 334-277-8520 FAX: 888-377-7818 www.jrsmith.com

CUSTOMER DRIVEN SINCE 1926

MEMBER OF:

LOCATION

# ADJUSTABLE FIXTURE SUPPORTS

## FOR SIPHON JET WATER CLOSETS - SHALLOW ROUGH-IN TYPE

## VERTICAL FITTINGS WITH SIDE INLET

### SINGLE

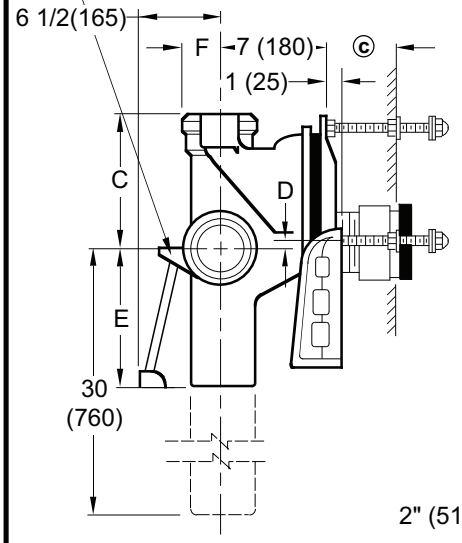


**Fig. 0240L**
**Side View**

### DOUBLE

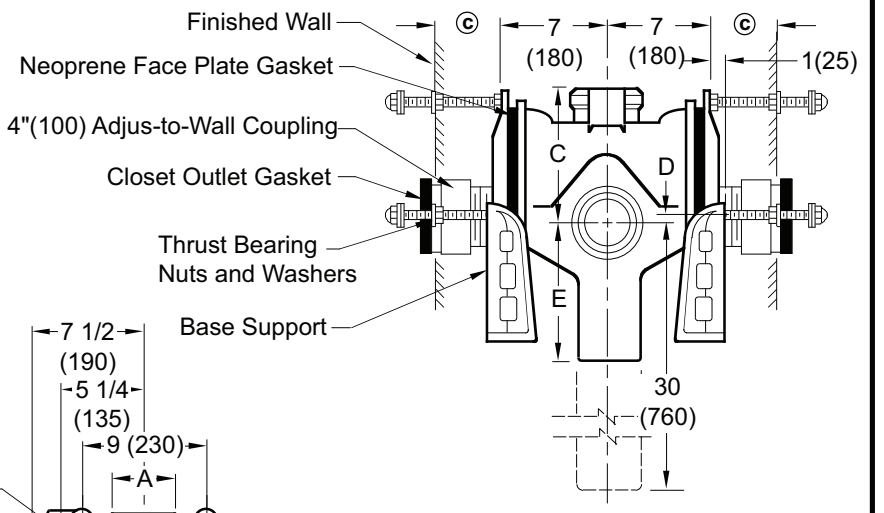


**Fig. 0240D**
**Side View**

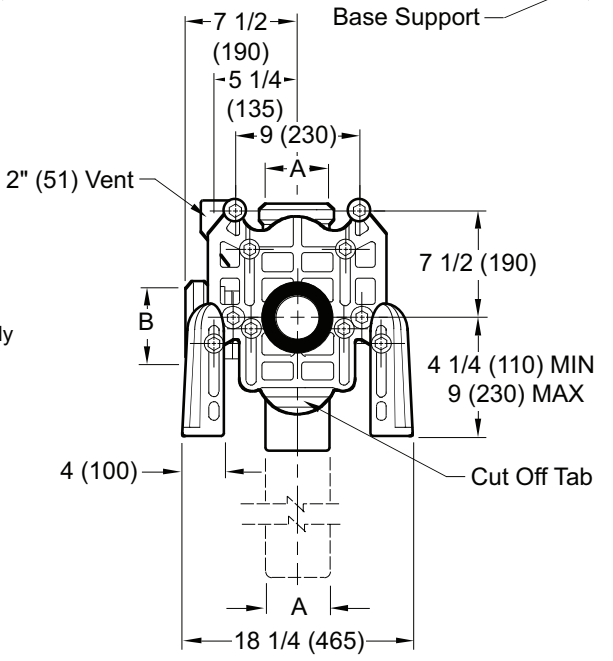


**Front View**

**NOTE:** Base support must be securely anchored to floor (with four 1/2" (13) bolts provided by contractor).

**NOTE:** 1 1/2 (38) or 2 (51) NPT inlet available. Add suffix -N

**NOTE:** Dimensions shown in parentheses are in millimeters.

The water closet gasket regularly furnished is made of molded neoprene and designed to fit water closet outlet dimensions and configurations shown in ANSI Standard A112.19.2M-1995, Figure 13B. If gasket is not found to be compatible to fixture due to nonconformance of said fixture to ANSI A112.19.2M, then fixture manufacturer shall be consulted for a suitable gasket recommendation. Jay R. Smith assumes no liability for connections to fixtures which do not conform to these standards.

- [ ] Fig. 0240L . . . CAULK Left Hand
- [ ] Fig. 0240R . . . CAULK Right Hand
- [ ] Fig. 0240D . . . CAULK Double
- [ ] Fig. 0270L . . . CAULK L.H. Long Barrel
- [ ] Fig. 0270R . . . CAULK R.H. Long Barrel
- [ ] Fig. 0270D . . . CAULK Double Long Barrel

| A x B Size | C | D MIN | D MAX | E | F |
|---|---|---|---|---|---|
| 4 x 4 (100) x (100) | 9 (230) | 1 1/2 (38) | 4 1/4 (110) | 10 (255) | 3 (76) |
| 5 x 4 (125) x (100) | 11 1/2 (290) | 1 1/2 (38) | 4 1/4 (110) | 11 1/2 (290) | 3 1/2 (89) |
| 6 x 4 (150) x (100) | 11 1/2 (290) | 1 1/2 (38) | 4 1/4 (110) | 11 1/2 (290) | 4 (100) |

ⓒ dimension = 4" (100) (regularly furnished) consisting of nipple and Adjus-to-Wall coupling permitting adjustment from 3" (76) min. to 4" (100) max. Absolute Minumum of 1 1/2"(38) is available using short butt end nipple, less Adjus-to-Wall Coupling.

Conforms with the requirements of ASME A112.6.1M up to a 500 lbs (227kg) static load rating.

| REV. | DATE | DESCRIPTION | BY | CKD. BY |
|---|---|---|---|---|
| N | 6-17-26 | Revised Text | TB | CL |
| M | 6-19-24 | Revised Chart | HS | CL |
| L | 12-7-22 | Added Note | KK | CL |
| K | 10/09/99 | Deleted Note | JJ | BS |

WEIGHT POUNDS

VOLUME CUBIC FEET

FIGURE NUMBER **0240,0270**

N | DRAWING NUMBER S0240 | SIZE A | SCALE: NONE | DATE: 2-28-86 | APPROVED BY: JD | CHECKED BY: CR | DRAWN BY: CM | 0240,0270 | FIGURE NUMBER

DIMENSIONS ARE SUBJECT TO MANUFACTURERS TOLERANCE AND CHANGE WITHOUT NOTICE
WE CAN ASSUME NO RESPONSIBILITY FOR USE OF SUPERSEDED OR VOID DATA

WARNING: Cancer and Reproductive Harm - www.P65Warnings.ca.gov