NOTE:
USE OF TEFLON TAPE ON ALL THREADED CONNECTIONS IS RECOMMENDED

IMPORTANT! AFTER INSTALLATION, ALL JOINTS REQUIRE SECURITY SEALANT BY INSTALLER TO ELIMINATE GAPS BETWEEN WALL AND FIXTURE.

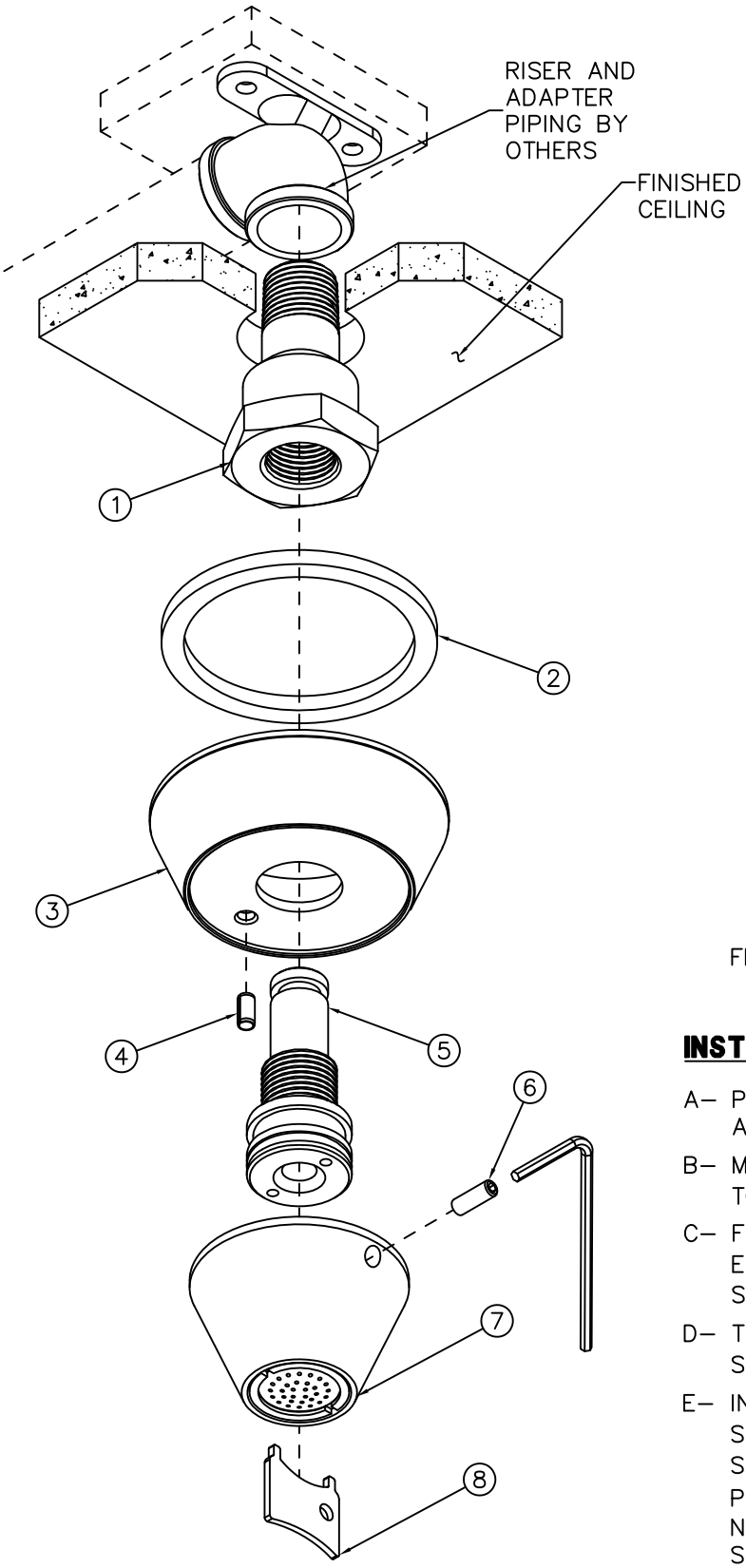

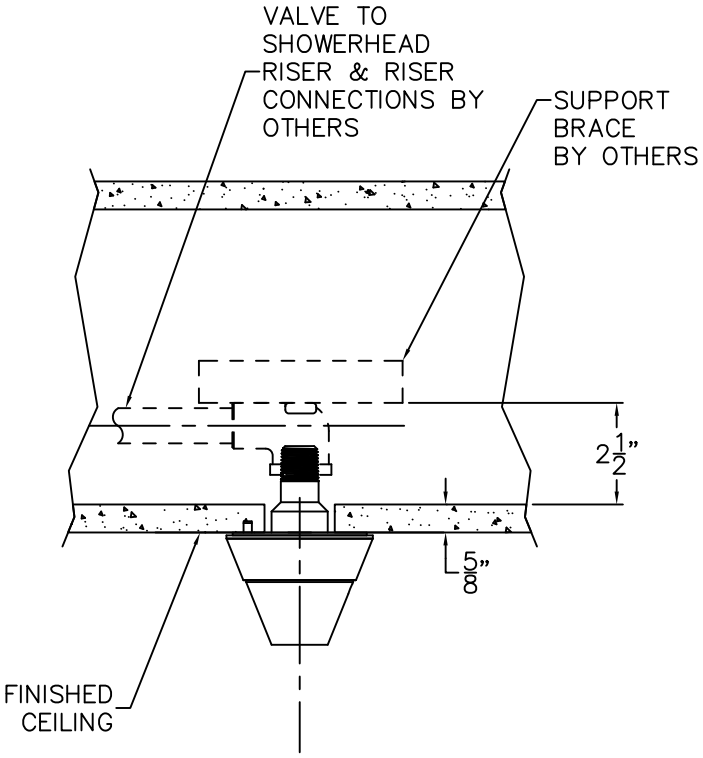

INSTALLATION INSTRUCTIONS:

A– PRIOR TO MAKING UP CONNECTIONS TO VALVE ASSEMBLY, FLUSH SUPPLY LINES THOROUGHLY.

B– MAKE UP SHOWER RISER CONNECTION FROM VALVE TO 1/2" NPT MALE SHOWERHEAD (1).

C– FIT ESCUTCHEON GASKET (2) INTO SHOWERHEAD ESCUTCHEON (3) AND SECURE BY THREADING SPRAYHEAD ADAPTER (5).

D– THREAD ANTI ROTATION SPRING PIN (4) INTO SHOWERHEAD ESCUTCHEON (3) POSITION AS SHOWN.

E– INSTALL CONICAL SHOWERHEAD (7) ONTO SHOWERHEAD ESCUTCHEON (5) AND SECURE USING SET SCREW (6) POSITION AS SHOWN (ALLEN WRENCH. PROVIDED).
NOTE: ITEM (8) UNIVERSAL TOOL MAY BE USED FOR SPRAY NOZZLE REMOVAL AS SHOWN.

WHITEHALL MANUFACTURING
P.O. BOX 3527 Industry, CA 91744
15125 Proctor Ave Industry, CA 91746
(626) 968–6681 FAX (626) 855–4862

TITLE		
WHD-SHD-C, LIGATURE RESISTANT CEILING MOUNTED SHOWER HEAD		
MANUFACTURE DATE	DATE ISSUED	DRAWING NUMBER
JUNE 2021 TO PRESENT	**06/17/2021**	**9918-305-001**
	DATE REVISED **05/05/2024**	