SMITH® JAY R. SMITH MFG. CO.®
MEMBER OF MORRIS GROUP INTERNATIONAL
POST OFFICE BOX 3237
MONTGOMERY, ALABAMA 36109-0237 (USA)
TEL: 334-277-8520 FAX: 888-377-7818 www.jrsmith.com
CUSTOMER DRIVEN SINCE 1926
MEMBER OF:

LOCATION

PROMENADE DECK DRAINS

MEDIUM - 11" (280) SQUARE

Load Rating: Light Duty having a Safe Live (Static) Load less than 2,000 lbs. (900 kg) per ASME A112.6.3 Floor Drain Standard. For the specific Safe Live Load rating of any grate, contact the Smith representative or factory direct.

Free Area
31 SQ IN
(200) SQ CM

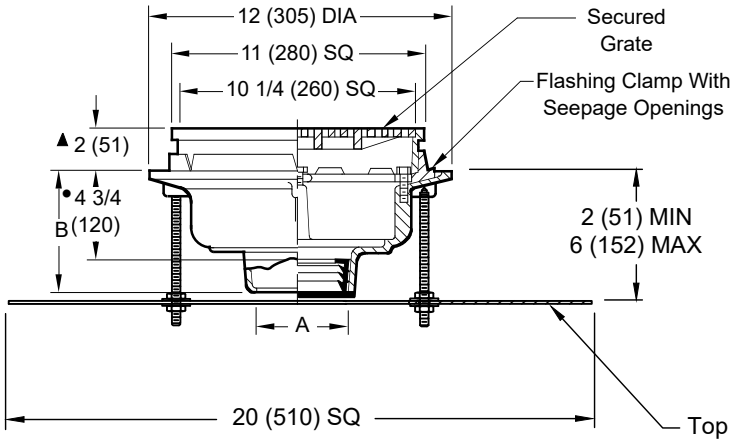

☐ Fig. 1450C-DEP . . . . . CAULK OUTLET
☐ Fig. 1450Y-DEP . . . . . NO-HUB OUTLET
☐ Fig. 1450T-DEP . . . . . THREADED OUTLET

• This Dimension to Internal Stop of Speedi-Set® Gasket.
▲ Add 3/16" (5) when bronze top is specified.

A SIZE	02 (50)	03 (75)	04 (100)	05 (125)	06 (150)
B	6 (150) for Caulk, NO-HUB and Speedi-Set® 4 3/4 (120) for Threaded				

recommended deck opening
13 (330) DIA

REGULARLY FURNISHED:
Duco Cast Iron Body with Top Mount Deck Extension Plate and Flashing Clamp with Seepage Openings and Secured Square Hole ADA Light Duty Grate.

VARIATIONS:
☐ Expansion Joint (Specify Fig. 1710)
☐ Extension (Specify Height) -E
☐ L Speedi-Set® Service Weight 02(50), 03(75) & 04"(100) sizes only
☐ LXH Speedi-Set® Extra Heavy 02(50), 03(75) & 04"(100) sizes only
☐ Secondary Flashing Clamp -C2
☐ Vandal Proof Grate -U
☐ Heel Proof Grate -HP
☐ Bucket -B

OPTIONAL MATERIALS:
☐ Ductile Iron Grate -M
☐ Galvanized Cast Iron -G
☐ Nickel Bronze Top -NB
☐ Polished Bronze Top -PB

NOTE: Floor drains or area drains used to drain areas subject to rainfall should have an open area equal to twice the cross sectional area of the connecting pipe.

NOTE: Dimensions shown in parentheses are in millimeters.

REV.	DATE	DESCRIPTION	BY	CKD. BY
A	5-9-25	Revised Variations	TB	CL

WEIGHT POUNDS | VOLUME CUBIC FEET | FIGURE NUMBER 1450-DEP

A | DRAWING NUMBER S1450-DEP | SIZE A | SCALE: NONE | DATE: 2-6-24 | APPROVED BY: CL | CHECKED BY: CL | DRAWN BY: HS | FIGURE NUMBER 1450-DEP

DIMENSIONS ARE SUBJECT TO MANUFACTURERS TOLERANCE AND CHANGE WITHOUT NOTICE
WE CAN ASSUME NO RESPONSIBILITY FOR USE OF SUPERSEDED OR VOID DATA

WARNING: Cancer and Reproductive Harm - www.P65Warnings.ca.gov