MORRIS GROUP
INTERNATIONAL

INSTALLATION INSTRUCTIONS

REFER TO LOCAL CODES AND/OR INDUSTRY STANDARDS FOR CORRECT WASTE DRAIN SLOPE.

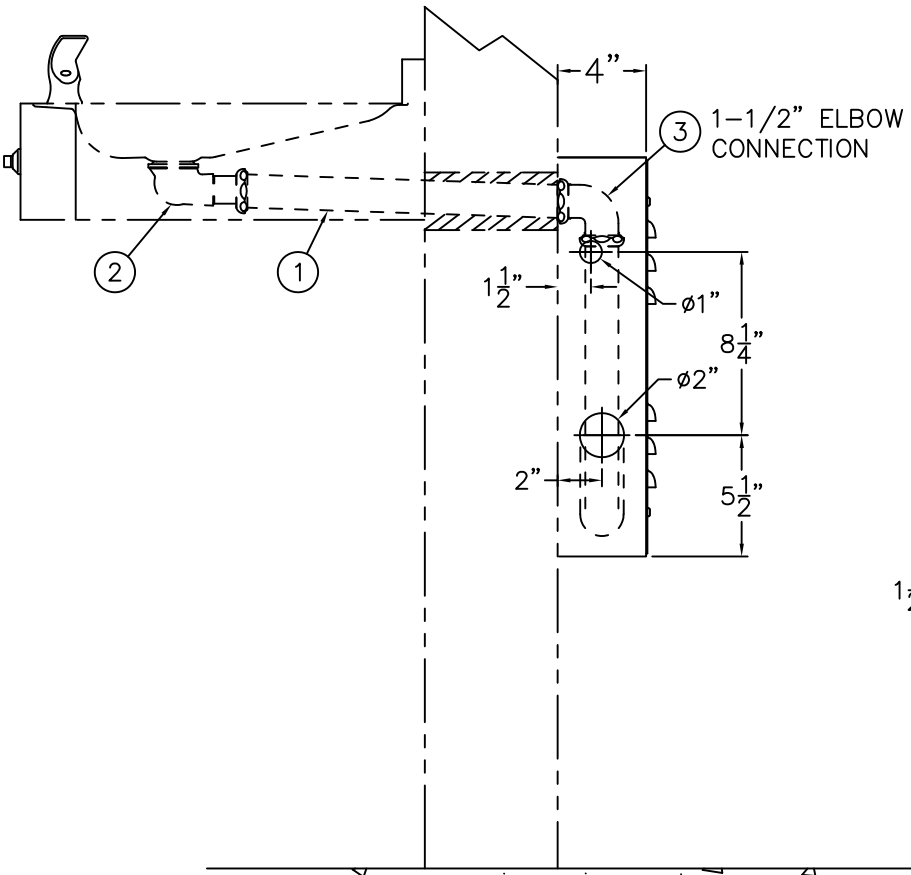

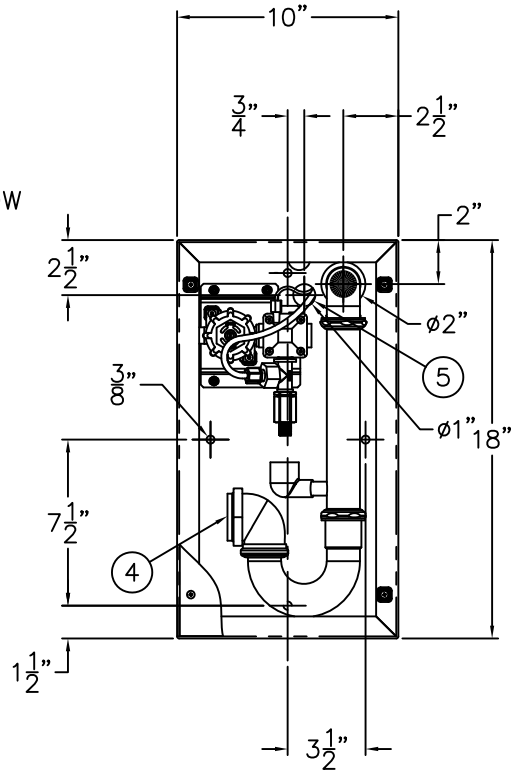

ALL WALL ANCHORS AND ANCHORING HARDWARE ARE PROVIDED BY THE INSTALLER. FREEZE RESISTANT BOX MUST BE INSTALLED BEHIND FIXTURE WALL WITH TEMPERATURES THAT REMAIN ABOVE FREEZING.

NOTE: 1/4" SUPPLY LINE FROM VALVE TO BUBBLER MUST NOT DIP DOWN BELOW THE VALVE. IT SHOULD ALSO MAINTAIN A DOWNHILL PATH WITHOUT DIPPING FROM THE BUBBLER TO THE VALVE.

INSTALLATION INSTRUCTIONS:

A– INSTALL FIXTURE FOLLOWING APPROPRIATE INSTALLATION SHEETS AND PROVIDE THRU WALL OPENINGS FOR ELBOW WASTE EXTENSION (1) OUTLET AND AIR AND SUPPLY TUBING. NOTE: THRU WALL CONDUIT AND WALL INSULATION IS PROVIDED BY THE INSTALLER.

B– ASSEMBLE WASTE EXTENSION TUBE (1) THRU WALL TO FIXTURE CLOSE ELBOW (2).

C– ANCHOR VALVE AND WASTE BOX ON INTERIOR WALL BY ALIGNING FP ELBOW (3) WITH FIXTURE WASTE EXTENSION OUTLET (1).

D– MAKE UP WASTE CONNECTIONS TO FP BOX 1–1/2" IPS P–TRAP WASTE OUTLET (4).

E– CONNECT SUPPLY AND AIR TUBING FROM VALVE THRU BOX OPENING (5) TO FIXTURE BUBBLER AND PUSHBUTTON. (SEE NOTE ABOVE.)

F– FLUSH WATER SUPPLY LINE OF ALL DEBRIS PRIOR TO CONNECTING TO VALVE. CONNECT SUPPLY LINE TO VALVE 1/2" NPS HOSE END VALVE INLET CONNECTION.

G– ATTACH COVER TO BOX TO COMPLETE FP INSTALLATION.

MORRIS GROUP INTL
P.O. BOX 3527 Industry, CA 91744
15125 Proctor Ave Industry, CA 91746
(626) 336–4561 FAX (626) 961–2200

TITLE		
1-STATION FREEZE RESISTANT BOX		
MANUFACTURE DATE	DATE ISSUED	DRAWING NUMBER
SEPTEMBER 1991 TO PRESENT	**12/14/09**	**9908-030-002**
	DATE REVISED **08/05/22 A**	

7/64