SMITH® JAY R. SMITH MFG. CO.®
MEMBER OF MORRIS GROUP INTERNATIONAL
POST OFFICE BOX 3237
MONTGOMERY, ALABAMA 36109-0237 (USA)
TEL: 334-277-8520 FAX: 888-377-7818 www.jrsmith.com
CUSTOMER DRIVEN SINCE 1926
MEMBER OF:

LOCATION

LABOR SAVER® URINAL SUPPORTS
FOR OFF-THE-FLOOR URINALS

WITH SUPPORTING AND BEARING STUDS FOR BLOWOUT AND WASHOUT URINALS

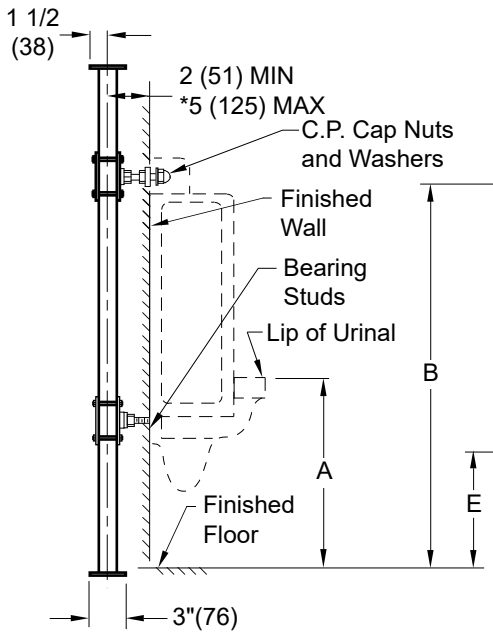

Fig. 0615
Side View

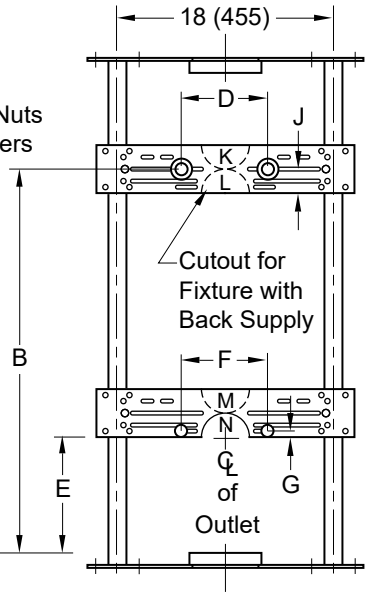

Front View

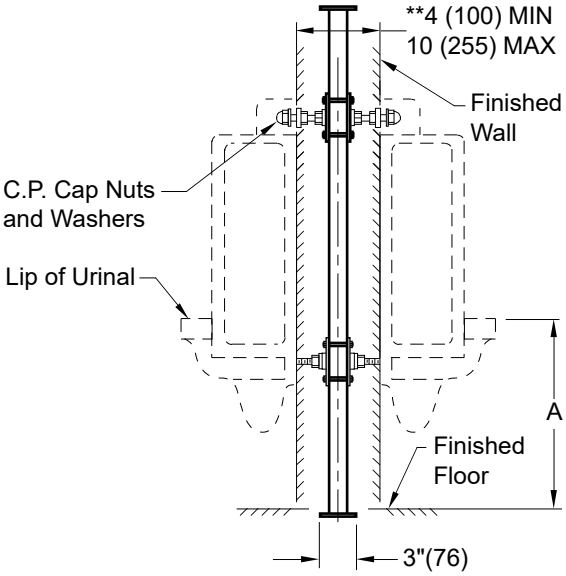

Fig. 0615D
Side View

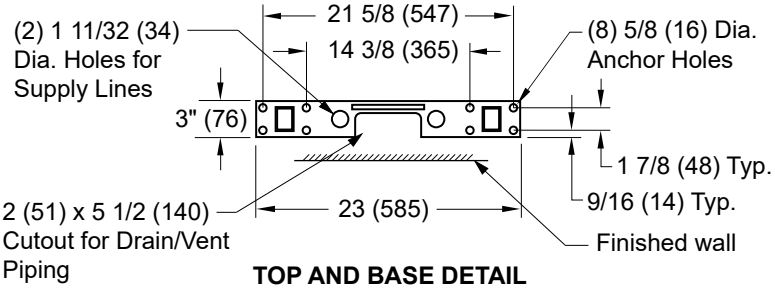

TOP AND BASE DETAIL

ROUGH-IN TABLE

FIXTURE MFG.	NAME	NUMBER	SIZE	CUTOUT FOR	
				INLET	OUTLET

A	B	D	E	F	G	J	K	L	M	N

Conforms to ASME A112.6.1M.

NOTE: The rough-in dimensions listed on this drawing are based on current information available to Jay R. Smith by the fixture manufacturers. We recommend that you verify these dimensions with the fixture manufacturer. We will not accept responsibility for rough-in dimension changes by the fixture manufacturer.

NOTE: *This dimension can be increased when fixture support is to be installed behind the wall (specify when required and wall thickness).**This dimension can be increased when required (specify wall thickness).

NOTE: Dimensions shown in parentheses are in millimeters.

REV.	DATE	DESCRIPTION	BY	CKD. BY
G	4-19-24	Added ASME Note	HS	JT
F	01/20/11	Updated Logo	JJ	TW
E	9-27-10	Added ® to LABOR SAVER	RN	CL
D	5-9-03	Removed C in Table	RN	AM

WEIGHT POUNDS | VOLUME CUBIC FEET | FIGURE NUMBER **0615**

DRAWING NUMBER S0615 | SIZE A | SCALE: NONE | DATE: 03/27/01 | APPROVED BY: AM | CHECKED BY: CR | DRAWN BY: JJ | 0615 | FIGURE NUMBER | G

WE CAN ASSUME NO RESPONSIBILITY FOR USE OF SUPERSEDED OR VOID DATA
DIMENSIONS ARE SUBJECT TO MANUFACTURERS TOLERANCE AND CHANGE WITHOUT NOTICE

WARNING: Cancer and Reproductive Harm - www.P65Warnings.ca.gov