SMITH® JAY R. SMITH MFG. CO.®
MEMBER OF MORRIS GROUP INTERNATIONAL
POST OFFICE BOX 3237
MONTGOMERY, ALABAMA 36109-0237 (USA)
TEL: 334-277-8520 FAX: 888-377-7818 www.jrsmith.com

CUSTOMER DRIVEN SINCE 1926

MEMBER OF:

LOCATION

WATER SUPPLY CONTROL BOXES FOR FLUSHING RIM & CAN WASHING DRAINS

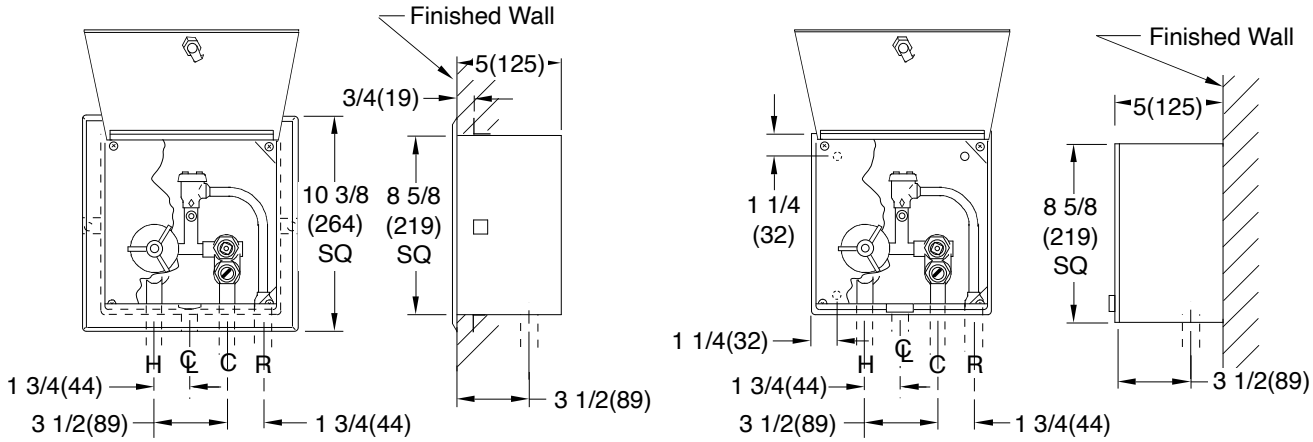

NOTE: Dimensions shown in parentheses are in millimeters.

REGULARLY FURNISHED:

Box - Type 304 stainless steel with cylinder type key lock and piano hinged cover. All exposed surfaces are polished to a No. 4 satin finish.

Internal Parts - Control valves, screwdriver stops and atmospheric type vacuum breaker are all bronze. Component parts are assembled with type "L" copper tubing and all connections are silver brazed. H & C inlet and remote outlet fittings are 1/2"(6) NPT female. All are provided with integral ears secured to the control box with stainless steel vandal-proof screws, preventing damage during installation.

REV.	DATE	DESCRIPTION	BY	CKD. BY
C	7-25-23	Removed Function	HS	CL
B	8-26-96	Added Millimeters	EMB	BS
A	1-3-94	Submittal Update	EMB	BS

WEIGHT POUNDS

VOLUME CUBIC FEET

FIGURE NUMBER **3380, 3385**

DRAWING NUMBER S3380 | SIZE A | SCALE: NONE | DATE: 9-19-85 | APPROVED BY: SJM | CHECKED BY: JD | DRAWN BY: PJ | FIGURE NUMBER 3380, 3385 | C

WE CAN ASSUME NO RESPONSIBILITY FOR USE OF SUPERSEDED OR VOID DATA
DIMENSIONS ARE SUBJECT TO MANUFACTURERS TOLERANCE AND CHANGE WITHOUT NOTICE

WARNING: Cancer and Reproductive Harm - www.P65Warnings.ca.gov