SMITH® JAY R. SMITH MFG. CO.®
MEMBER OF MORRIS GROUP INTERNATIONAL
POST OFFICE BOX 3237
MONTGOMERY, ALABAMA 36109-0237 (USA)
TEL: 334-277-8520 FAX: 888-377-7818 www.jrsmith.com

CUSTOMER DRIVEN SINCE 1926

MEMBER OF:

LOCATION

FLOOR CLEANOUTS WITH "TWIS-TO-FLOOR®" ADJUSTABLE TOPS FOR UNFINISHED AREAS

ROUND CAST IRON TOP - TRACTOR COVER

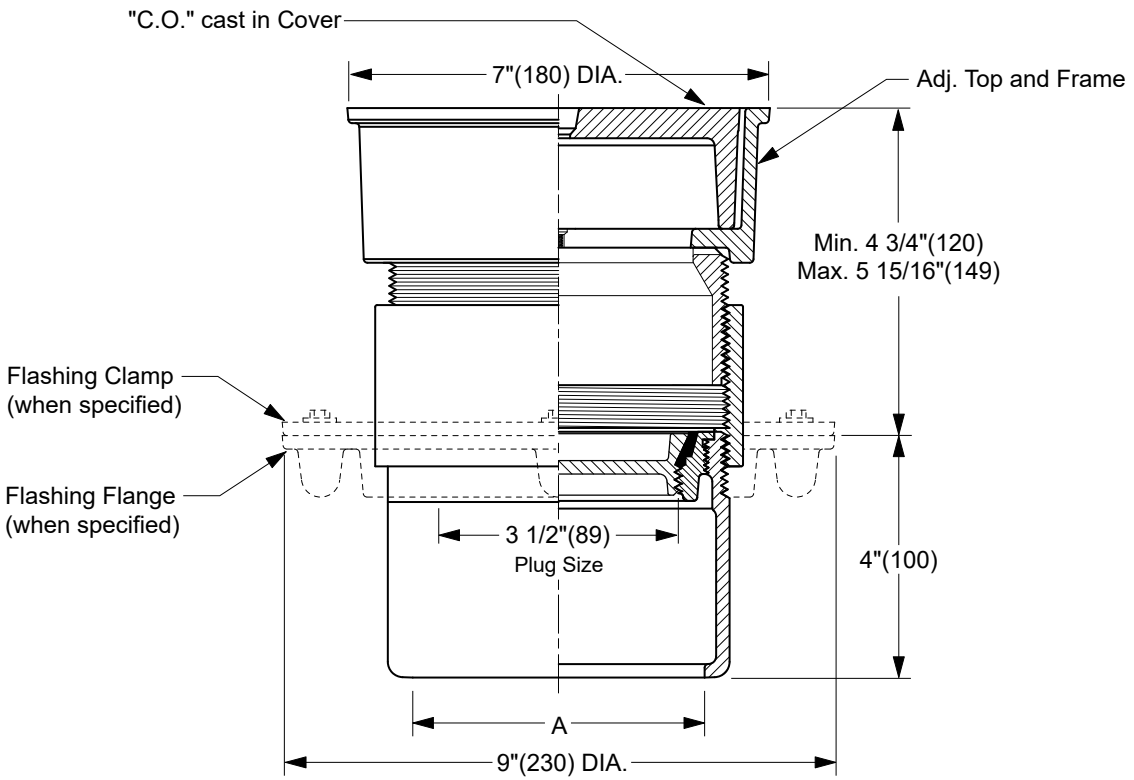

TWIS-TO-FLOOR® ADJUSTMENT

INSIDE CAULK OUTLET

"A" (Pipe Size) = 02(50), 03(75) or 04(100)

Conforms to ASME 112.36.2/CSA B79.2

- ☐ Fig. 4245C.....Gasket Seal - ABS Plug
- ☐ Fig. 4246C.....Gasket Seal - Bronze Plug
- ☐ Fig. 4248C.....Taper Thread - Bronze Plug
- ☐ Fig. 4249C.....Taper Thread - ABS Plug

(Twis-to-Floor® design shown with gasketed plug.)

NOTE: Dimensions shown in parentheses are in millimeters.

REGULARLY FURNISHED:
Duco Cast Iron Cleanout with Round Adjustable Scoriated Cast Iron Top with Non-Tilt Tractor Cover. Closure Plug Type as Indicated by Figure Number Selected.

VARIATIONS:
- ☐ Center Securing Screw -CSS
- ☐ Vandal Proof Center Securing Screw -U
- ☐ Flashing Flange -F
- ☐ Flange with Flashing Clamp -F-C

OPTIONAL MATERIALS:
- ☐ Galvanized Cast Iron -G
- ☐ Ductile Iron Cover -M
- ☐ Nickel Bronze Top -NB
- ☐ Polished Bronze Top -PB

REV.	DATE	DESCRIPTION	BY	CKD. BY
P	4-11-24	Added ASME Note	HS	CL
N	08-17-23	Removed Function	HS	CL
M	07/29/02	Corrected Clamp & Flange view	JJ	CL
L	10/31/00	New design	JJ	BS

WEIGHT POUNDS | VOLUME CUBIC FEET

FIGURE NUMBER **4245 SERIES**

WARNING: Cancer and Reproductive Harm - www.P65Warnings.ca.gov

P | DRAWING NUMBER S4245 | SIZE A | SCALE: NONE | DATE: 2-16-70 | APPROVED BY: JM | CHECKED BY: BH | DRAWN BY: RK | 4245 SERIES | FIGURE NUMBER

WE CAN ASSUME NO RESPONSIBILITY FOR USE OF SUPERSEDED OR VOID DATA
DIMENSIONS ARE SUBJECT TO MANUFACTURERS TOLERANCE AND CHANGE WITHOUT NOTICE