SMITH® JAY R. SMITH MFG. CO.®
MEMBER OF MORRIS GROUP INTERNATIONAL
POST OFFICE BOX 3237
MONTGOMERY, ALABAMA 36109-0237 (USA)
TEL: 334-277-8520 FAX: 888-377-7818 www.jrsmith.com
CUSTOMER DRIVEN SINCE 1926
MEMBER OF:

LOCATION

# ADJUSTABLE FIXTURE SUPPORTS
## FOR SIPHON JET WATER CLOSETS

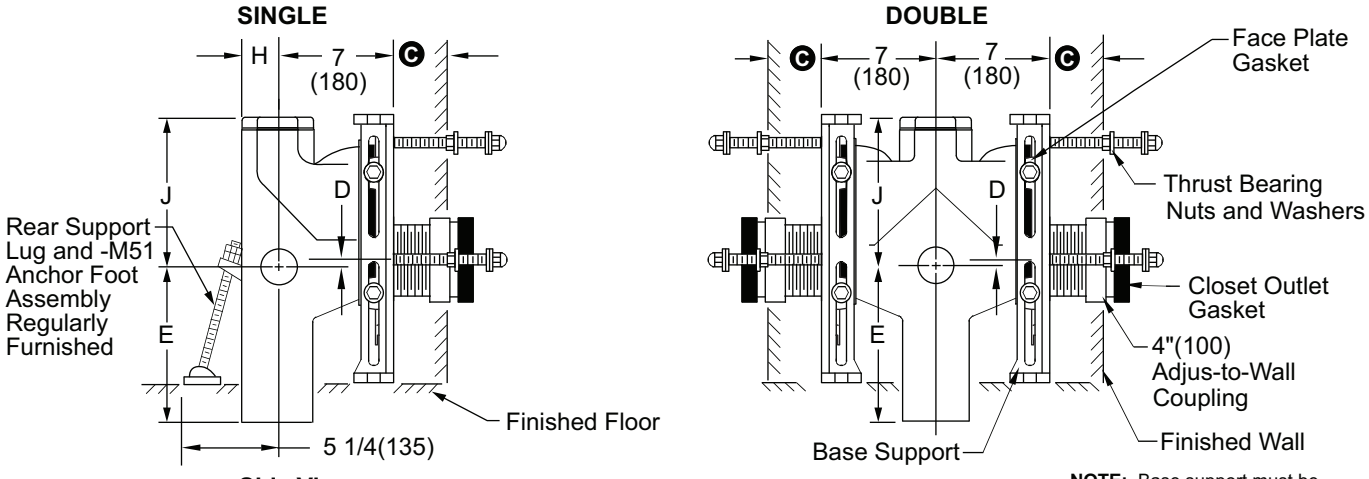


| A SIZE | D MIN | D MAX | E | **F | H | J |
|---|---|---|---|---|---|---|
| 4(100) | 1 1/2(38) | 4 1/4(110) | 14(355) | 5 1/4(135) | 2 1/4(57) | 9(230) |
| 5(125) | 1 1/2(38) | 4 1/4(110) | 11 1/2(290) | 6 1/4(160) | 2 3/4(70) | 11 1/2(290) |
| 6(150) | 1 1/2(38) | 4 1/4(110) | 11 1/2(290) | 6 1/4(160) | 3 1/4(83) | 11 1/2(290) |

Conforms with the requirements of ASME A112.6.1M up to a 500 lbs (227kg) static load rating.

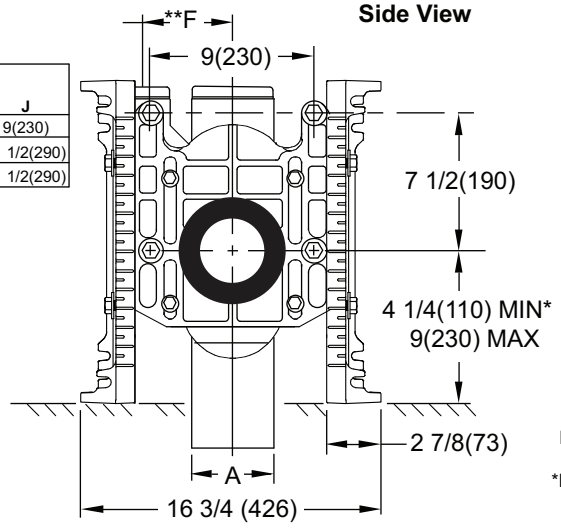


**NOTE:** Base support must be firmly anchored to floor with bolts provided by contractor.

**NOTE:** All single supports shall have the rear support lug anchored by the contractor to assure a rigid installation. The rear support completes the 3-point anchoring system for ultimate stability of the installation.

NOTE: When used with concealed flush valve locate face plate behind supply pipe.

NOTE: Shallower minimum rough-in dimension available to acommodate lower rough bowls. Specify dimension required.

NOTE: 1 1/2(38) or 2(51) NPT inlet available. Add suffix -N

*NOTE: 9"(230) core drilled hole is required for rough-in 4 1/4(110) thru 6 1/2(165)

**NOTE: "F" dimension is from centerline of vent to centerline of stack.

☐ **Fig. 0230Y (-M54 ). . . . NO-HUB**
☐ **Fig. 0230DY (-M54) . . . NO-HUB DOUBLE**

### C DIMENSION - ADJUS-TO-WALL TYPE OUTLET CONNECTION

The Smith Adjus-to-Wall outlet connection provides adjustment at the face of the wall at the time the fixture is set; thus, compensating for wall construction variations. The C dimension is measured from the front of the face plate to the finished wall. To properly determine the length of nipple required, deduct 1"(25) from the C dimension. When the C dimension exceeds 7" (180), the -M40 Wide Pipe Chase Support is recommeded. The Adjus-to-Wall coupling will provide 1/2"(13) horizontal adjustment in either direction with the coupling extended 5/16"(8) past face of the finished wall.

C dimension = 4"(100) (regularly furnished) consisting of nipple and Adjus-to-Wall coupling permitting adjustment from 3"(76) min. to 4"(100) max. Absolute Minumum of 1 1/2"(38) is available using short butt end nipple, less Adjus-to-Wall Coupling.

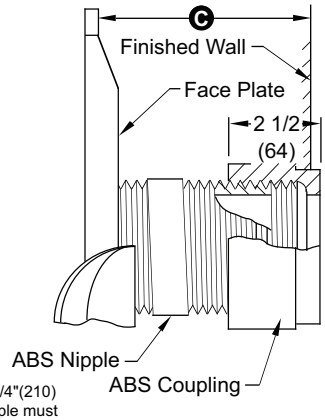


NIPPLE LENGTHS AVAILABLE

| LENGTH | MIN. | C MAX. |
|---|---|---|
| 2 1/2(64) | 2 1/4(57) | 3 1/4(83) |
| *3 1/4(83) | 3(76) | 4(100) |
| *8 1/4(210) | 8(205) | 9(230) |
| 10(255) | 9 3/4(250) | 10 3/4(275) |
| 12(305) | 11 3/4(300) | 12 3/4(325) |
| 15(380) | 14 3/4(375) | 15 3/4(400) |
| 18(455) | 17 3/4 (450) | 18 3/4(475) |

*ABS (Regularly Furnished) other lengths PVC.

**NOTE:** Dimensions shown in parentheses are in millimeters.

**NOTE:** When nipple lengths between 3 1/4"(83) and 8 1/4"(210) are specified, the 8 1/4"(210) nipple will be supplied. Nipple must be cut to specified length by others.

| REV. | DATE | DESCRIPTION | BY | CKD. BY |
|---|---|---|---|---|
| M | 6-17-26 | Revised Text | TB | CL |
| L | 2-1-24 | Rev. Adjus-to-Wall | HS | CL |
| K | 12-7-22 | Added Note | KK | CL |
| J | 8-19-20 | Rev. Draw./Dim: 16 7/16 ►16 3/4 | MW | CL |

WEIGHT POUNDS | VOLUME CUBIC FEET

FIGURE NUMBER **0230Y (-M54)**

M | DRAWING NUMBER S0230Y (-M54) | SIZE A | SCALE: NONE | DATE: 9-2-87 | APPROVED BY: CR | CHECKED BY: BS | DRAWN BY: WAS | FIGURE NUMBER 0230Y (-M54)

WE CAN ASSUME NO RESPONSIBILITY FOR USE OF SUPERSEDED OR VOID DATA
DIMENSIONS ARE SUBJECT TO MANUFACTURERS TOLERANCE AND CHANGE WITHOUT NOTICE

**WARNING:** Cancer and Reproductive Harm - www.P65Warnings.ca.gov